Parts Manual

Mfg. No: 2691528-00

SXD21SSWM82. 82V Battery Electric 21" Step Sense Walk Mower

Copyright © Briggs & Stratton. All Rights reserved

24-Apr-2024

Model Components

Page

Deck Group. 4
Handles Group. 8
Wheels & Deck Group. 12
Torque Specification Chart. 14

Not For Reproduction

Copyright © Briggs & Stratton. All Rights reserved

Deck Group

Note: Unless noted otherwise, use the standard torque specifications

Mfg. No: 2691528-00

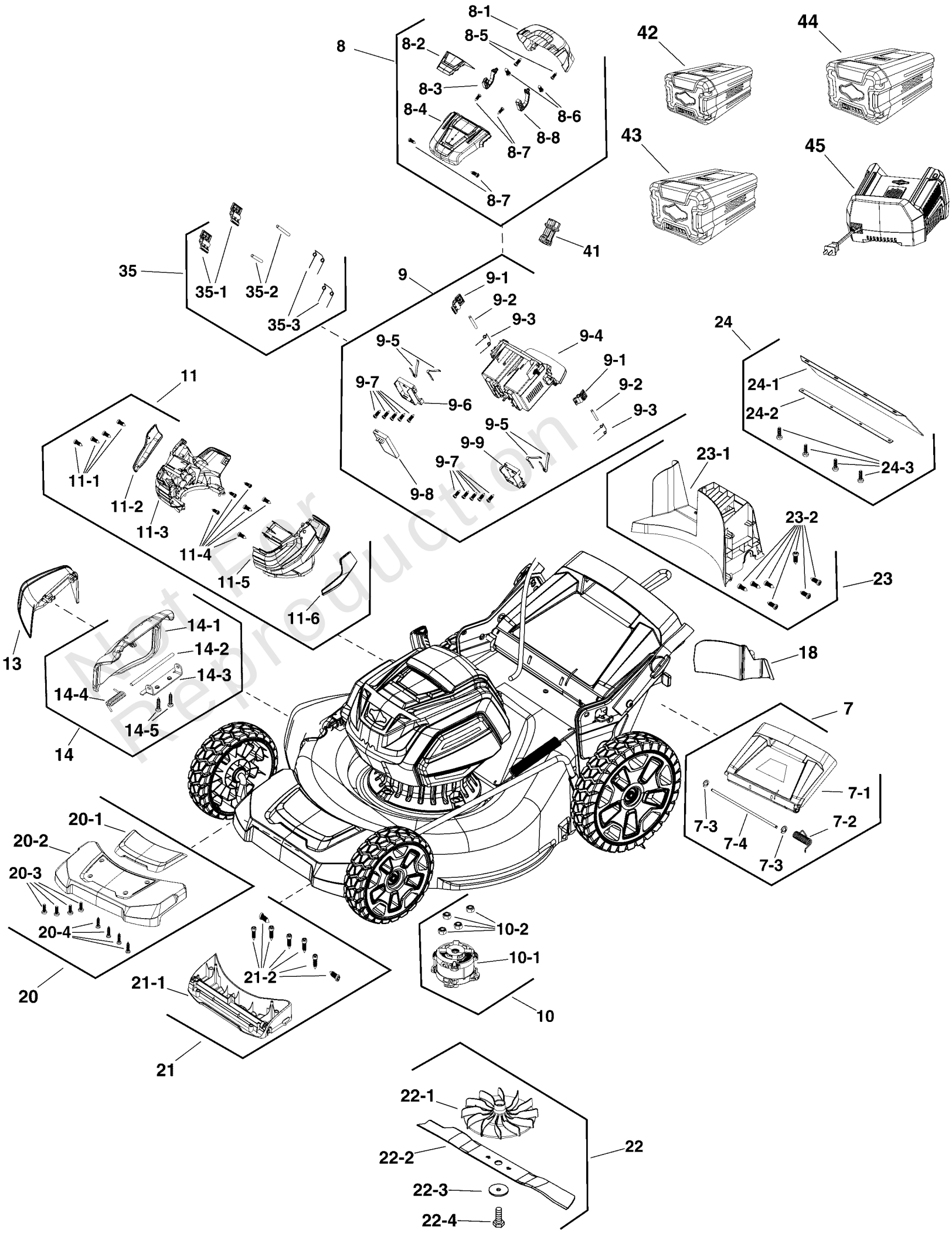

Not For Reproduction

Deck Group

REF NO	PART NO	QTY	DESCRIPTION
7	84002061	1	KIT. Rear Cover
7-1	-----	1	COVER, Rear
7-2	-----	1	SPRING
7-3	-----	2	WASHER, Split
7-4	-----	1	SHAFT
8	84003278	1	TOP COVER ASSEMBLY
8-1	-----	1	COVER, Battery
8-2	-----	1	TOP COVER
8-3	-----	1	HINGE
8-4	-----	1	COVER, Top
8-5	-----	2	SCREW, Self Tapping
8-6	-----	2	SCREW ST4.2-12
8-7	-----	4	SCREW, Pan Head
8-8	-----	1	HINGE
9	84002076	1	KIT, Housing , Battery & PCB ASSEMBLY
9-1	-----	2	BUTTON
9-2	-----	2	PIN
9-3	-----	2	SPRING
9-4	-----	1	BATTERY HOUSING, Dual
9-5	-----	4	SPRING
9-6	-----	1	PLATE, Printed Circuit Board
9-7	-----	10	SCREW ST4.2-12
9-8	-----	1	PRINTED CIRCUIT BOARD
9-9	-----	1	PLATE, Printed Circuit Board
10	-----	1	MOTOR ASSEMBLY -(Order Wholegood)
10-1	-----	1	MOTOR
10-2	-----	4	NUT
11	-----	1	BATTERY COVER ASSEMBLY
11-1	-----	10	SCREW
11-2	-----	1	SCREEN, Dust
11-3	-----	1	COVER, Right
11-4	-----	1	COVER, Left
11-5	-----	1	HOUSING, Left
13	770194	1	KIT, Deflector, Side Discharge
14	770193	1	KIT, Cover
14-1	-----	1	COVER
14-2	-----	1	SHAFT
14-3	-----	1	BRACKET
14-4	-----	1	SPRING, Torsion
14-5	-----	2	SCREW
18	84002065	1	PLUG, Mulching
20	84003422	1	KIT, TOP COVER
20-1	-----	1	PANEL
20-2	-----	1	COVER, Panel
20-3	-----	4	SCREW
20-4	-----	4	SCREW
21	84003423	1	KIT, BOTTOM COVER
21-1	-----	1	PANEL, Bottom
21-2	-----	7	SCREW
22	84002068	1	KIT, Mower Blade

Not For Reproduction

Copyright © Briggs & Stratton. All Rights reserved

Deck Group

Note: Unless noted otherwise, use the standard torque specifications

Mfg. No: 2691528-00

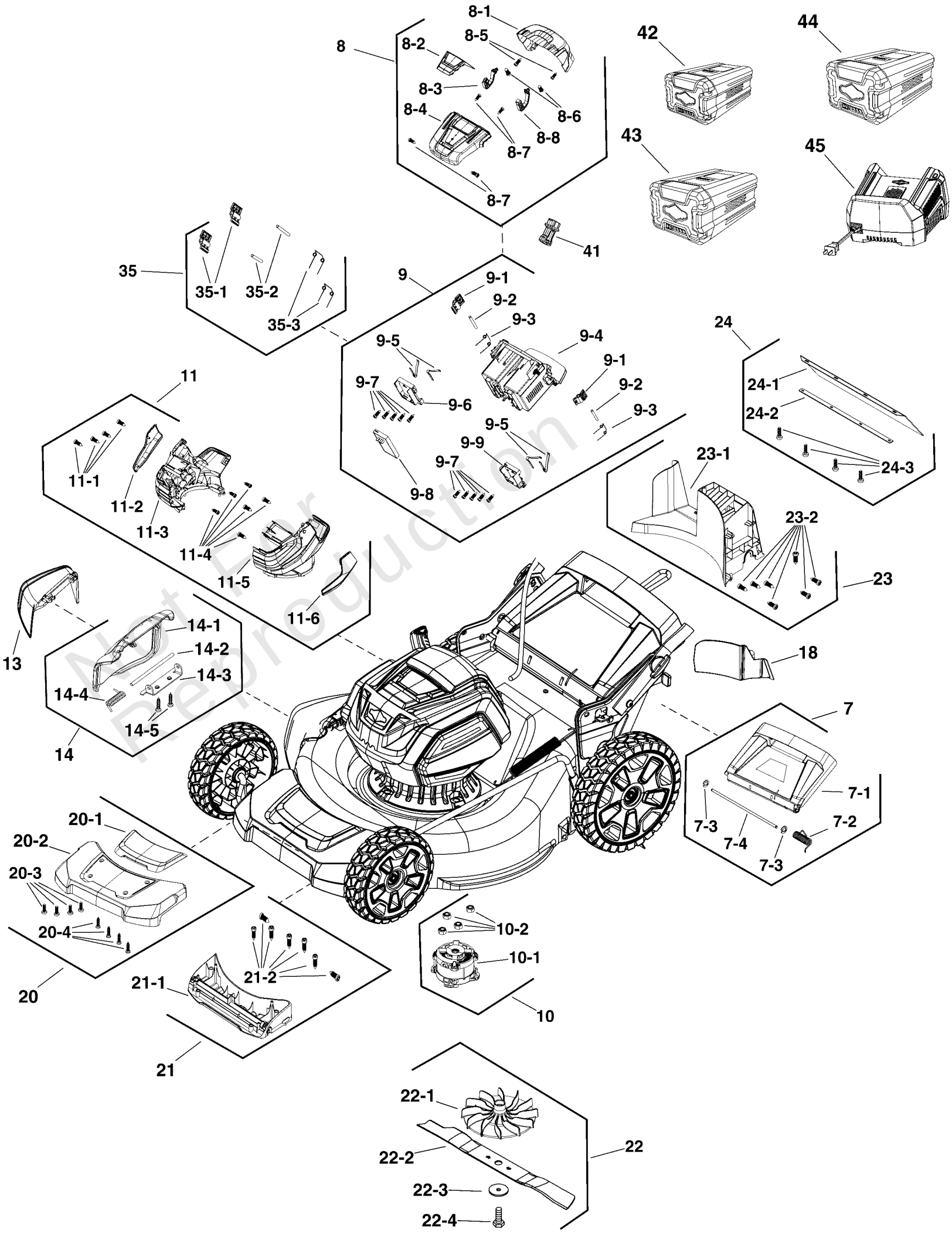

Not For Reproduction

Copyright © Briggs & Stratton. All Rights reserved

Deck Group

REF NO	PART NO	QTY	DESCRIPTION
22-1	-----	1	FAN
22-2	-----	1	BLADE, Mower
22-3	-----	1	WASHER
22-4	-----	1	BOLT, M10 X 35
23	-----	1	BAFFLE, Rear -(Order Wholegood)
23-1	-----	1	BULKHEAD, Back
23-2	-----	7	SCREW
24	84002066	1	KIT, Rear Deflector
24-1	-----	1	FLAP, Rear
24-2	-----	1	BRACE
24-3	-----	4	SCREW ST4.2-16
35	84002075	1	KIT, Battery Release
35-1	-----	2	BUTTON
35-2	-----	2	PIN
35-3	-----	2	SPRING
41	84002064	1	KEY, Safety
42	1760266	1	* BATTERY, 2.0, 82V NA -(Optional)
43	1760265	1	* BATTERY, 4.0, 82V NA -(Optional)
44	1760966	1	* BATTERY, 5.0, 82V NA -(Optional)
45	1760263	1	* CHARGER, Battery, NA -(Optional)
----	770294	1	REMOTE BELT FOR BATTERY -(Optional, Not Shown)

Not For Reproduction

Copyright © Briggs & Stratton. All Rights reserved

Handles Group

Note: Unless noted otherwise, use the standard torque specifications

Mfg. No: 2691528-00

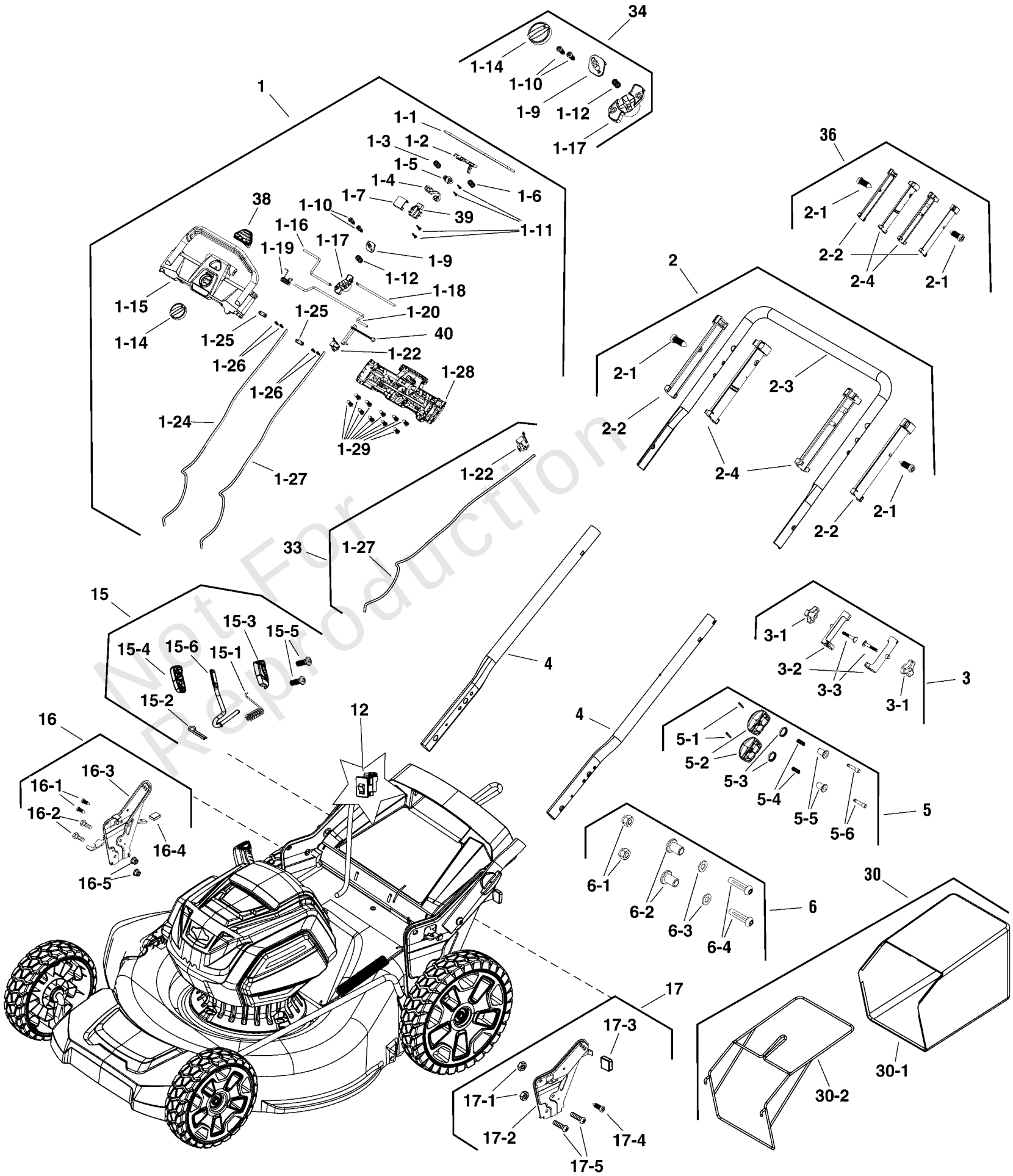

Not For Reproduction

Handles Group

REF NO	PART NO	QTY	DESCRIPTION
1	84002042	1	PANEL ASSEMBLY -(Includes Ref. Nos. 1-1 to 1-29, 38, 39 & 40)
1-1	-----	1	ROD, Personal Pace
1-2	-----	1	SWITCH
1-3	-----	1	SPRING
1-4	-----	1	SPRING, Pivot
1-5	-----	1	DISC, Tension
1-6	-----	1	SPRING
1-7	-----	1	INSERT
1-9	-----	1	PIVOT, Control
1-10	-----	2	SCREW, ST 4.2 x 18
1-11	-----	4	SCREW
1-12	-----	1	SPRING, Compression
1-14	-----	1	KNOB, Control
1-15	-----	1	PANEL, Upper
1-16	-----	1	LEVER, Lock, RH
1-17	-----	1	PIVOT, Lock
1-18	-----	1	LEVER, Lock, LH
1-19	-----	1	SPRING, Torsion
1-20	-----	1	LEVER, Control
1-22	-----	1	SWITCH
1-24	-----	1	CABLE, Blade
1-25	-----	1	RETAINER
1-26	-----	4	SCREW, ST 4 x 16-F
1-27	-----	1	CABLE, Drive
1-28	-----	1	PANEL, Lower
1-29	-----	11	HINGE
2	84002043	1	KIT, Upper Handle -(Includes Ref. Nos. 2-1 through 2-4)
2-1	-----	2	HINGE
2-2	-----	2	SLIDE, Outer
2-3	-----	1	HANDLE, Upper
2-4	-----	2	SLIDE, Inner
3	84001954	1	KIT, Mounting Hardware -(Includes Ref. Nos. 3-1 through 3-3)
3-1	-----	2	KNOB, M8
3-2	-----	2	SLEEVE
3-3	-----	2	BOLT
4	84001931	2	KIT, Lower Handle
5	84001929	1	KIT, Knob, Lower Handle -(Includes Ref. Nos. 5-1 through 5-6)
5-1	-----	2	PIN
5-2	-----	2	KNOB, Lower Handle
5-3	-----	2	GASKET
5-4	-----	2	SPRING
5-5	-----	2	INSERT
5-6	-----	2	POST
6	84001930	1	KIT, Hardware, Lower Handle -(Includes Ref. Nos. 6-1 through 6-4)
6-1	-----	2	NUT, M8
6-2	-----	2	INSERT
6-3	-----	2	WASHER, Flat
6-4	-----	2	BOLT

Not For Reproduction

Copyright © Briggs & Stratton. All Rights reserved

Handles Group

Note: Unless noted otherwise, use the standard torque specifications

Mfg. No: 2691528-00

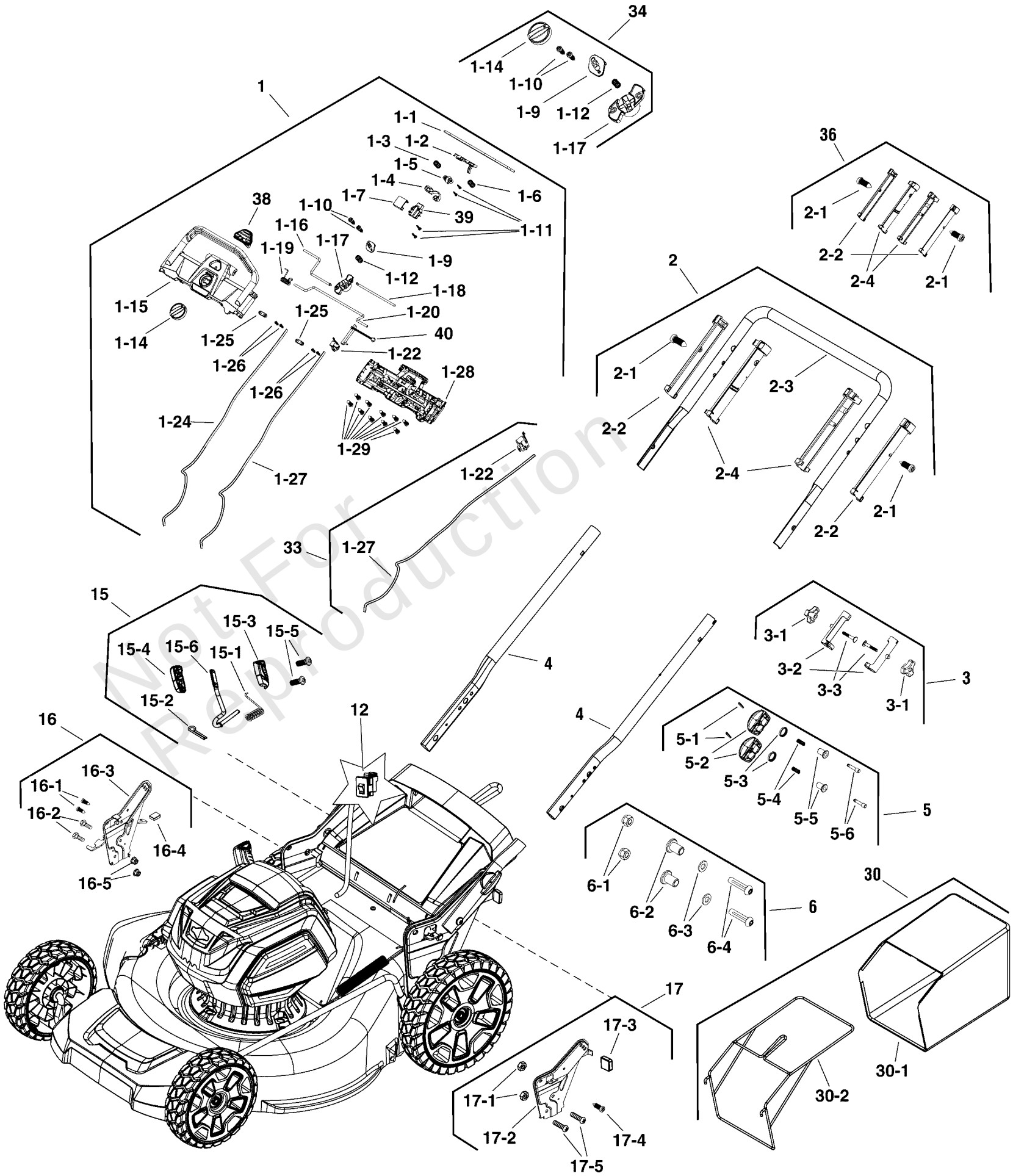

Not For Reproduction

Copyright © Briggs & Stratton. All Rights reserved

Handles Group

REF NO	PART NO	QTY	DESCRIPTION
12	84001946	1	SWITCH, Safety
15	770180	1	KIT, Handle, Height Adjust -(Includes Ref. Nos. 15-1 through 15-6)
15-1	-----	1	SPRING
15-2	-----	1	PIN, Cotter
15-3	-----	1	HOUSING, Left
15-4	-----	1	HOUSING, Right
15-5	-----	2	SCREW, Pan Torx Self Tap, ST4.2 x 20-C
15-6	-----	1	ROD, Adjusting
16	-----	1	HEIGHT ADJUST, Right -(Order Wholegood)
16-1	-----	2	SCREW
16-2	-----	2	BOLT, Hex Head, M10 x 20
16-3	-----	1	BRACKET, Height Adjust
16-4	-----	1	BUMPER
16-5	-----	2	LOCKNUT, M10
17	-----	1	HEIGHT ADJUST, Left -(Order Wholegood)
17-1	-----	2	LOCKNUT, M10
17-2	-----	1	BRACKET, Height Adjust
17-3	-----	1	BUMPER
17-4	-----	1	SCREW
17-5	-----	2	BOLT, Hex Head, M10 x 20
30	770182	1	GRASS CATCHER ASSEMBLY
30-1	-----	1	BAG, Grass Catcher
30-2	-----	1	FRAME
33	84002074	1	KIT, Drive Cable -(Includes Ref. Nos. 1-22 & 1-27)
33-1	-----	1	SWITCH
33-2	-----	1	CABLE, Drive
34	84002070	1	KIT, Control Knob -(Includes Ref. Nos. 1-9, 1-10, 1-12, 1-14, 1-17)
36	84001635	1	KIT, Slides -(Includes Ref. Nos. 2-1, 2-2 & 2-4)
38	84002071	1	KIT, Start Button
39	84002072	1	SWITCH, Operator Presence
40	84002073	1	SWITCH, Speed Control

Not For Reproduction

Copyright © Briggs & Stratton. All Rights reserved

Note: Unless noted otherwise, use the standard torque specifications

Mfg. No: 2691528-00

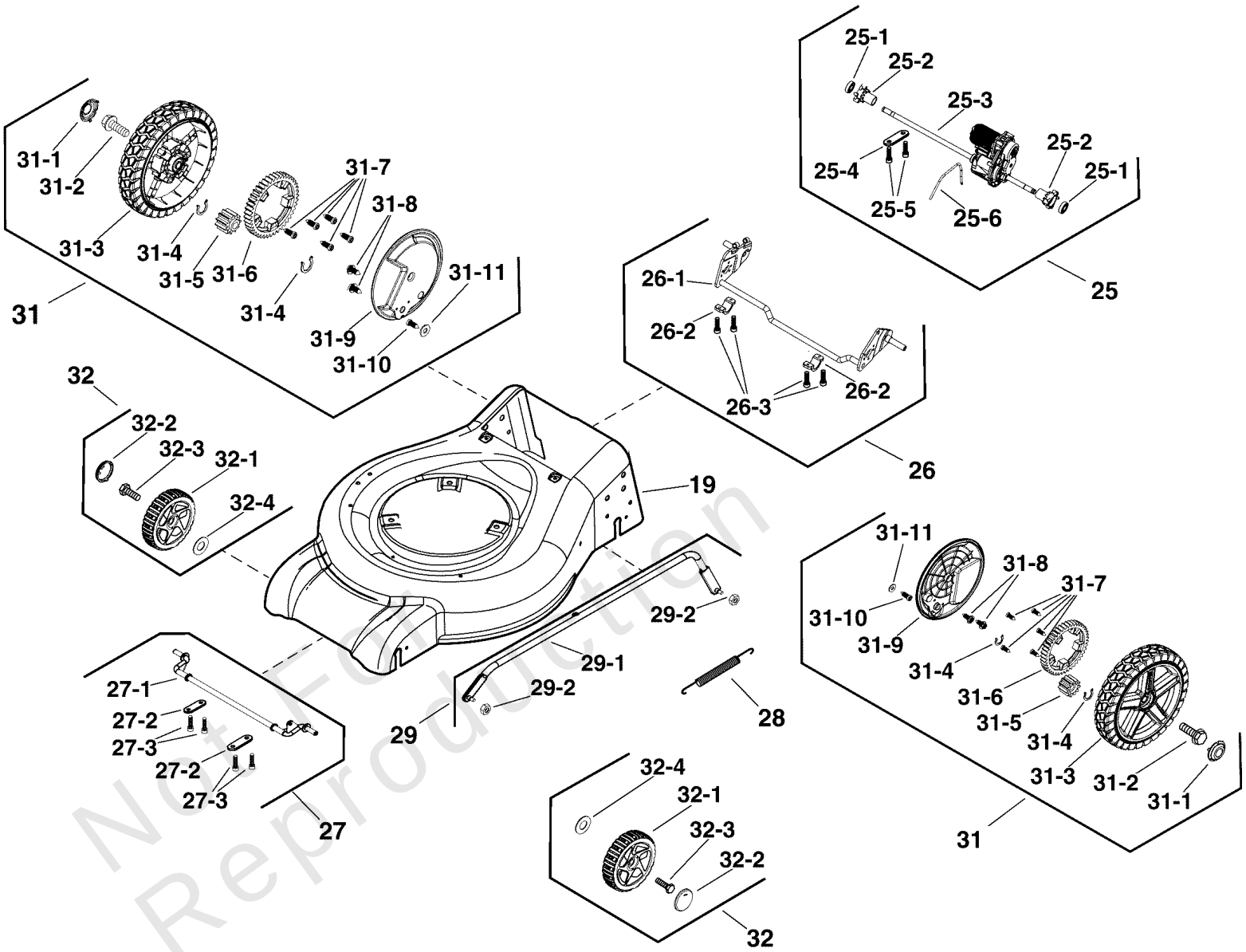

Not For Reproduction

Copyright © Briggs & Stratton. All Rights reserved

Wheels & Deck Group

REF NO	PART NO	QTY	DESCRIPTION
19	-----	1	MOWER DECK -(Order Wholegood)
25	84002067	1	KIT, GEARBOX
25-1	-----	2	BEARING
25-2	-----	2	COLLAR, Locking
25-3	-----	1	GEARBOX
25-4	-----	1	PLATE, Axle
25-5	-----	2	SCREW, Pan Torx Self Tap, ST4.2 x 20-C
25-6	-----	1	BAFFLE, Rear
26	84003421	1	KIT, REAR AXLE
26-1	-----	1	AXLE, REAR
26-2	-----	2	PLATE, Axle
26-3	-----	4	SCREW, Pan Torx Self Tap, ST4.2 x 20-C
27	770186	1	KIT, Front Axle
27-1	-----	1	AXLE, Front
27-2	-----	2	PLATE, Axle
27-3	-----	4	SCREW, Pan Torx Self Tap, ST4.2 x 20-C
28	84001935	1	SPRING, Height Adjust
29	-----	1	HEIGHT ADJUST ASSEMBLY -(Order Wholegood)
29-1	-----	1	ROD, Height Adjust
29-2	-----	2	NUT
31	84002069	1	KIT, REAR WHEEL
31-1	-----	1	COVER, Wheel
31-2	-----	1	BOLT
31-3	-----	1	WHEEL, 10"
31-4	-----	2	RING, Snap
31-5	-----	1	GEAR, Drive
31-6	84003415	1	GEAR, Drive
31-7	-----	5	SCREW, HexHead Self Tap, ST4.2 x 20-C
31-8	-----	2	SCREW, HexHead Self Tap
31-9	-----	1	COVER, Dust
31-10	-----	1	SCREW, Socket Head, ST4.2 x 20
31-11	-----	1	GASKET, 5.3
32	771438	1	KIT, Front Wheel
32-1	-----	1	WHEEL, 8"
32-2	-----	1	WASHER
32-3	-----	1	BOLT
32-4	-----	1	COVER, Wheel

Not For Reproduction

Copyright © Briggs & Stratton. All Rights reserved

Hardware Identification & Torque Specifications

Torque Specification Chart

FOR STANDARD METRIC MACHINE HARDWARE (Tolerance ± 20%)

Property Class	5.6 Class 5.6		8.8 Class 8.8		10.9 Class 10.9		12.9 Class 12.9	
Size Of Hardware	*in/lbs* **ft/lbs**	Nm.	*in/lbs* **ft/lbs**	Nm.	*in/lbs* **ft/lbs**	Nm.	*in/lbs* **ft/lbs**	Nm.
M3	*5.88*	*.56*	*13.44*	*1.28*	*19.2*	*1.80*	*22.92*	2.15
M4	*13.44*	*1.28*	*30.72*	*2.90*	*43.44*	*4.10*	*52.56*	4.95
M5	*26.4*	*2.50*	*60.96*	*5.75*	**5.97**	*8.10*	**7.15**	9.7
M6	*44.64*	*4.3*	**7.3**	*9.9*	**10.3**	*14*	**12.1**	16.5
M7	**5.2**	*7.1*	**12.1**	*16.5*	**16.9**	*23*	**19.9**	27
M8	**7.7**	*10.5*	**17.7**	*24*	**25**	*34*	**29**	40
M10	**15**	*21*	**35**	*48*	**50**	*67*	**59**	81
M12	**26**	*36*	**61**	*83*	**86.2**	*117*	**103**	140
M14	**42**	*58*	**101**	*132*	**136**	*185*	**162**	220
M16	**64**	*88*	**147**	*200*	**210**	*285*	**250**	340
M18	**89**	*121*	**202**	*275*	**287**	*390*	**346**	470
M20	**126**	*171*	**290**	*390*	**405**	*550*	**486**	660
M22	**169**	*230*	**390**	*530*	**559**	*745*	**656**	890
M24	**217**	*295*	**497**	*375*	**708**	*960*	**840**	1140
M27	**320**	*435*	**733**	*995*	**1032**	*1400*	**1239**	1680
M30	**435**	*590*	**995**	*1350*	**1401**	*1900*	**1681**	2280
M33	**590**	*800*	**1349**	*1830*	**1902**	*2580*	**2278**	3090
M36	**759**	*1030*	**1740**	*2360*	**2441**	*3310*	**2935**	3980
M39	**988**	*1340*	**2249**	*3050*	**3163**	*4290*	**3798**	5150

The guides and ruler furnished below are designed to help you select the appropriate hardware.

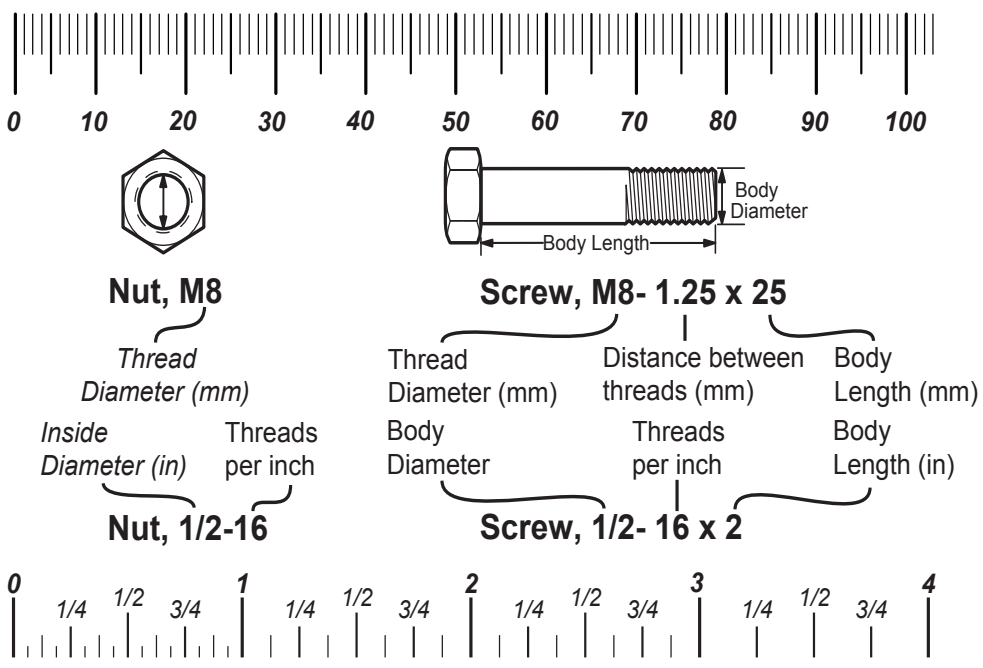

Standard Hardware Sizing

When a washer or nut is identified as **1/2"** (M8), this is the *Nominal size*, meaning the *inside diameter* is 1/2 inch (8mm metric thread diameter); if a second number is present it represents the *threads per inch* (distance between threads).

When bolt or capscrew is identified as **1/2 - 16 x 2"** (M8 - 1.25 x 50), this means the *Nominal size*, or body diameter is 1/2 inch (8mm metric thread diameter), the second number,16, represents the *threads per inch, (distance between threads).* The final number is the body length of the bolt or screw, 2 inches (50mm).

Torque Specification Chart

FOR STANDARD MACHINE HARDWARE (Tolerance ± 20%)

Hardware Grade	No Marks SAE Grade 2		SAE Grade 5		SAE Grade 8	
Size Of Hardware	*in/lbs* **ft/lbs**	Nm.	*in/lbs* **ft/lbs**	Nm.	*in/lbs* **ft/lbs**	Nm.
8-32	*19*	2.1	*30*	3.4	*41*	4.6
8-36	*20*	2.3	*31*	3.5	*43*	4.9
10-24	*27*	3.1	*43*	4.9	*60*	6.8
10-32	*31*	3.5	*49*	5.5	*68*	7.7
1/4-20	*66*	7.6	**8**	10.9	**12**	16.3
1/4-28	*76*	8.6	**10**	13.6	**14**	19.0
5/16-18	**11**	15.0	**17**	23.1	**25**	34.0
5/16-24	**12**	16.3	**19**	25.8	**29**	34.0
3/8-16	**20**	27.2	**30**	40.8	**45**	61.2
3/8-24	**23**	31.3	**35**	47.6	**50**	68.0
7/16-14	**30**	40.8	**50**	68.0	**70**	95.2
7/16-20	**35**	47.6	**55**	74.8	**80**	108.8
1/2-13	**50**	68.0	**75**	102.0	**110**	149.6
1/2-20	**55**	74.8	**90**	122.4	**120**	163.2
9/16-12	**65**	88.4	**110**	149.6	**150**	204.0
9/16-18	**75**	102.0	**120**	163.2	**170**	231.2
5/8-11	**90**	122.4	**150**	204.0	**220**	299.2
5/8-18	**100**	136	**180**	244.8	**240**	326.4
3/4-10	**160**	217.6	**260**	353.6	**386**	525.0
3/4-16	**180**	244.8	**300**	408.0	**420**	571.2
7/8-9	**140**	190.4	**400**	544.0	**600**	816.0
7/8-14	**155**	210.8	**440**	598.4	**660**	897.6
1-8	**220**	299.2	**580**	788.8	**900**	1,244.0
1-12	**240**	326.4	**640**	870.4	**1,000**	1,360.0

NOTES

1. These torque values are to be used for all hardware excluding: locknuts, self-tapping screws, thread forming screws, sheet metal screws and socket head setscrews.
2. Recommended seating torque values for locknuts:
   a. for prevailing torque locknuts - use 65% of grade 5 torques.
   b. for flange whizlock nuts and screws - use 135% of grade 5 torques.
3. Unless otherwise noted on assembly drawings, all torque values must meet this specification.

Common Hardware Types

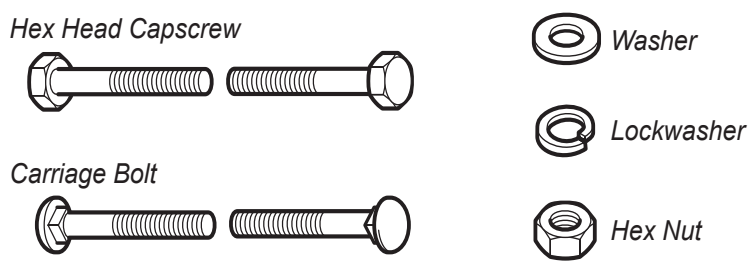

Wrench & Fastener Size Guide

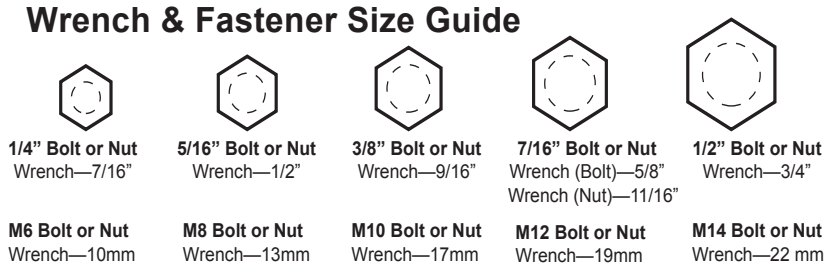

Copyright © Briggs & Stratton. All Rights reserved