Parts Manual

Mfg. No: 1687884-00

SXDWM82K, 82V Battery Electric 21" Walk Mower Kit, w/ (2) 2Ah Batteries & Charger

Copyright © Briggs & Stratton. All Rights reserved

24-Apr-2024

1760266 - BSB2AH82, 82V 2.0 Battery. . . . . .
1760265 - BSB4AH82, 82V 4.0 Battery. . . . . .
1760263 - BSRC82, Charger 110V. . . . . .

Not For Reproduction

Copyright © Briggs & Stratton. All Rights reserved

Model Components

Page

Deck Group. 4
Handles Group. 8
Wheels Group. 12
Torque Specification Chart. 14

Not For Reproduction

Copyright © Briggs & Stratton. All Rights reserved

Deck Group

Note: Unless noted otherwise, use the standard torque specifications

Mfg. No: 1687884-00

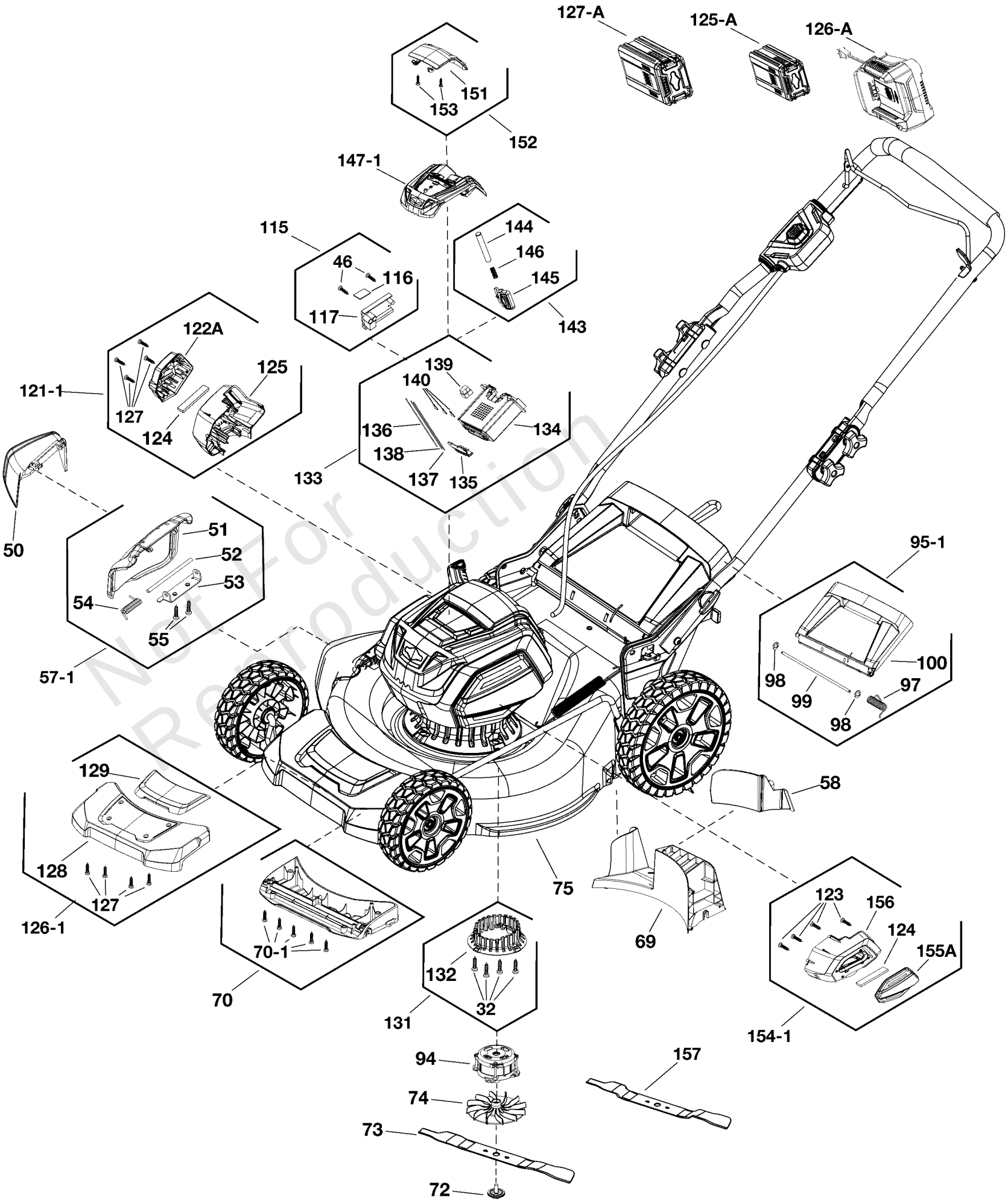

Not For Reproduction

Copyright © Briggs & Stratton. All Rights reserved

Deck Group

REF NO	PART NO	QTY	DESCRIPTION
50	770194	1	KIT, Deflector, Side Discharge
57-1	770193	1	KIT, Cover
51	-----	1	COVER
52	-----	1	SHAFT
53	-----	1	BRACKET
54	-----	1	SPRING, Torsion
55	-----	2	SCREW
58	770183	1	KIT, Mulch Plug
69	770205	1	KIT, Back Bulkhead
70	770206	1	KIT, Front Bulkhead
70-1	-----	11	SCREW
72	770190	1	KIT, Bolt
73	770191	1	KIT, Blade
74	770199	1	KIT, Fan
75	770204	1	KIT, Mower Deck
94	770174	1	KIT, Motor
95-1	770181	1	KIT, Rear Cover
97	-----	1	SPRING, Torsion
98	-----	2	PIN, Cotter
99	-----	1	SHAFT
100	-----	1	COVER, Rear
115	770203	1	KIT, PCB, NA
116	-----	1	SENSOR
117	-----	1	PCB
46	-----	2	SCREW
121-1	770197	1	KIT, Cover, Right
122A	-----	1	COVER, Right
123	-----	4	SCREW
124	-----	1	SCREEN, Dust
125	-----	1	HOUSING, Right
126-1	770477	1	KIT, Front Panel
127	-----	4	SCREW
128	-----	1	BUMPER
129	-----	1	COVER, Bumper
131	770200	1	KIT, Base
132	-----	1	BASE
32	-----	4	SCREW
133	770196	1	KIT, Housing, Battery, NA
134	-----	1	HOUSING, Battery
135	-----	1	INSERT
136	-----	1	WIRE, Yellow
137	-----	1	WIRE, Yellow
138	-----	1	WIRE, Yellow
139	-----	1	COVER
140	-----	3	CONTACT
143	770202	1	KIT, Battery Release
144	-----	1	PIN
145	-----	1	BUTTON, Battery Releasee
146	-----	1	SPRING, Torsion
147-1	770201	1	KIT, Top Cover
152	770195	1	KIT, Battery Cover

Not For Reproduction

Deck Group

Note: Unless noted otherwise, use the standard torque specifications

Mfg. No: 1687884-00

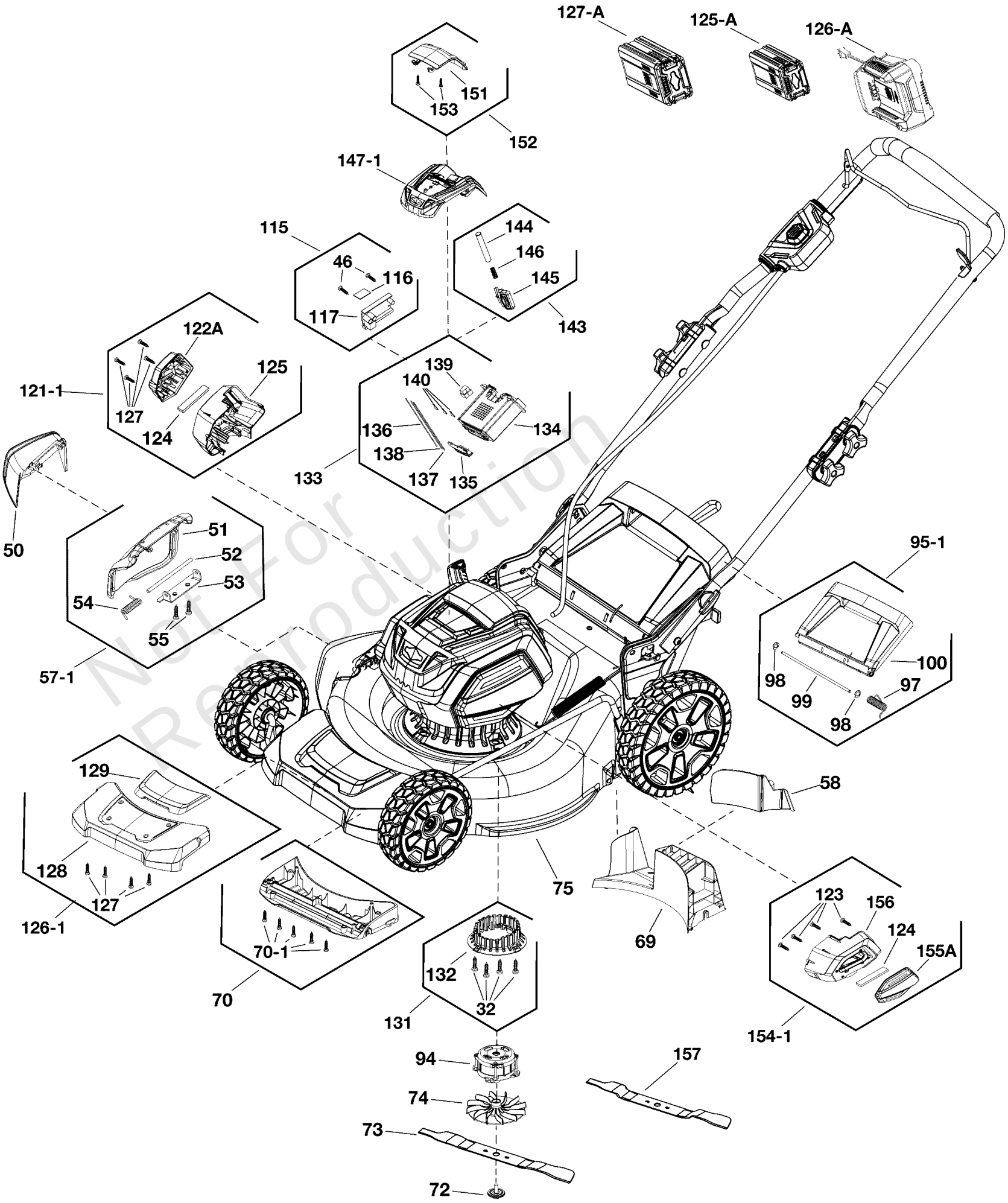

Not For Reproduction

Copyright © Briggs & Stratton. All Rights reserved

Deck Group

REF NO	PART NO	QTY	DESCRIPTION
151	-----	1	COVER, Battery
153	-----	2	SCREW
154-1	770198	1	KIT, Cover, Left
123	-----	4	SCREW
124	-----	1	SCREEN, Dust
155A	-----	1	COVER, Left
156	-----	1	HOUSING, Left
125-A	1760266	1	* BATTERY, 2.0, 82V NA -(Optional)
126-A	1760263	1	* CHARGER, Battery, NA -(Optional)
127-A	1760265	1	* BATTERY, 4.0, 82V NA -(Optional)
--	770294	1	REMOTE BELT FOR BATTERY -(Not Shown)
157	84004556	1	BLADE, Mulching, 21" -(Optional)

Not For Reproduction

Copyright © Briggs & Stratton. All Rights reserved

Handles Group

Note: Unless noted otherwise, use the standard torque specifications

Mfg. No: 1687884-00

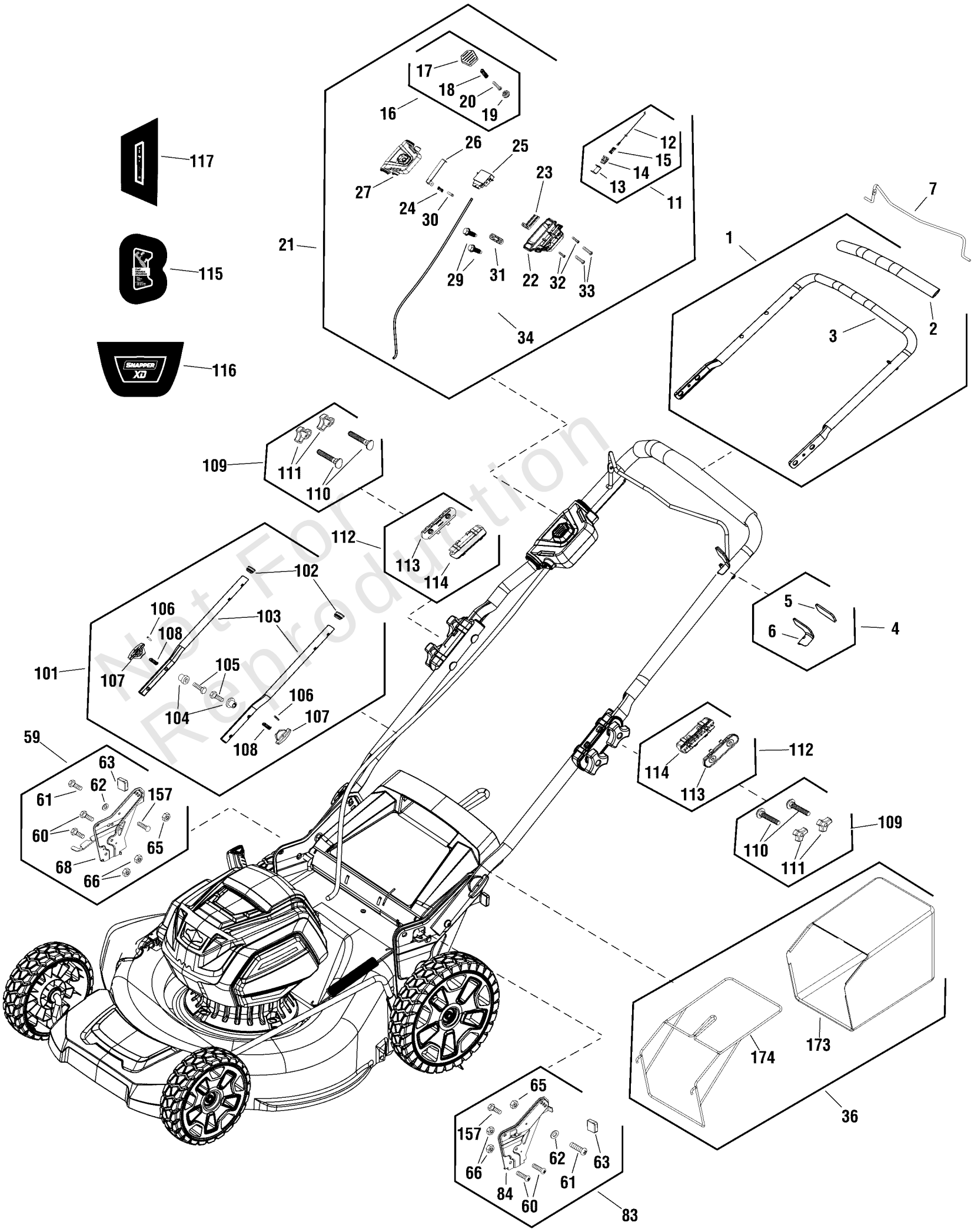

Not For Reproduction

Copyright © Briggs & Stratton. All Rights reserved

Handles Group

REF NO	PART NO	QTY	DESCRIPTION
1	770168	1	KIT, Upper Handle, NA
2	-----	1	GRIP, Foam
3	-----	1	HANDLE, Upper
4	770170	1	KIT, Stop, Bail
5	-----	1	SPONGE
6	-----	1	BRACKET
7	770169	1	KIT, Bail
11	770171	1	KIT, Cable
12	84003406	1	CABLE, Bail
13	-----	1	BRACKET
14	-----	1	BLOCK
15	-----	1	SPRING
16	770173	1	KIT, Button, Start
17	84003407	1	KIT, Speed Control
18	-----	1	SPRING
19	-----	1	GASKET
20	-----	1	SCREW
21	770172	1	KIT, Control Panel
22	-----	1	COVER, Bottom
23	-----	1	BRACKET
24	-----	1	SPRING
25	84003409	1	SWITCH
26	-----	1	PLATE
27	-----	1	COVER, Top
29	-----	2	SCREW
30	-----	1	PIN
31	-----	1	CLAMP
32	-----	2	SCREW
33	-----	2	SCREW
34	-----	1	WIRE, Yellow
36	770182	1	GRASS CATCHER ASSEMBLY
173	-----	1	BAG, Grass Catcher
174	-----	1	FRAME
59	770178	1	KIT, Height Adjust, Right, NA
60	-----	2	BOLT
61	-----	1	BOLT
62	-----	1	GASKET
63	-----	1	BUMPER
65	-----	1	NUT
66	-----	2	NUT
68	-----	1	BRACKET, Height Adjust
157	-----	1	SCREW
83	770179	1	KIT, Height Adjust, Left
84	-----	1	BRACKET, Height Adjust
60	-----	2	BOLT
61	-----	1	BOLT
62	-----	1	GASKET
63	-----	1	BUMPER
65	-----	1	NUT
66	-----	2	NUT
157	-----	1	SCREW

Not For Reproduction

Handles Group

Note: Unless noted otherwise, use the standard torque specifications

Mfg. No: 1687884-00

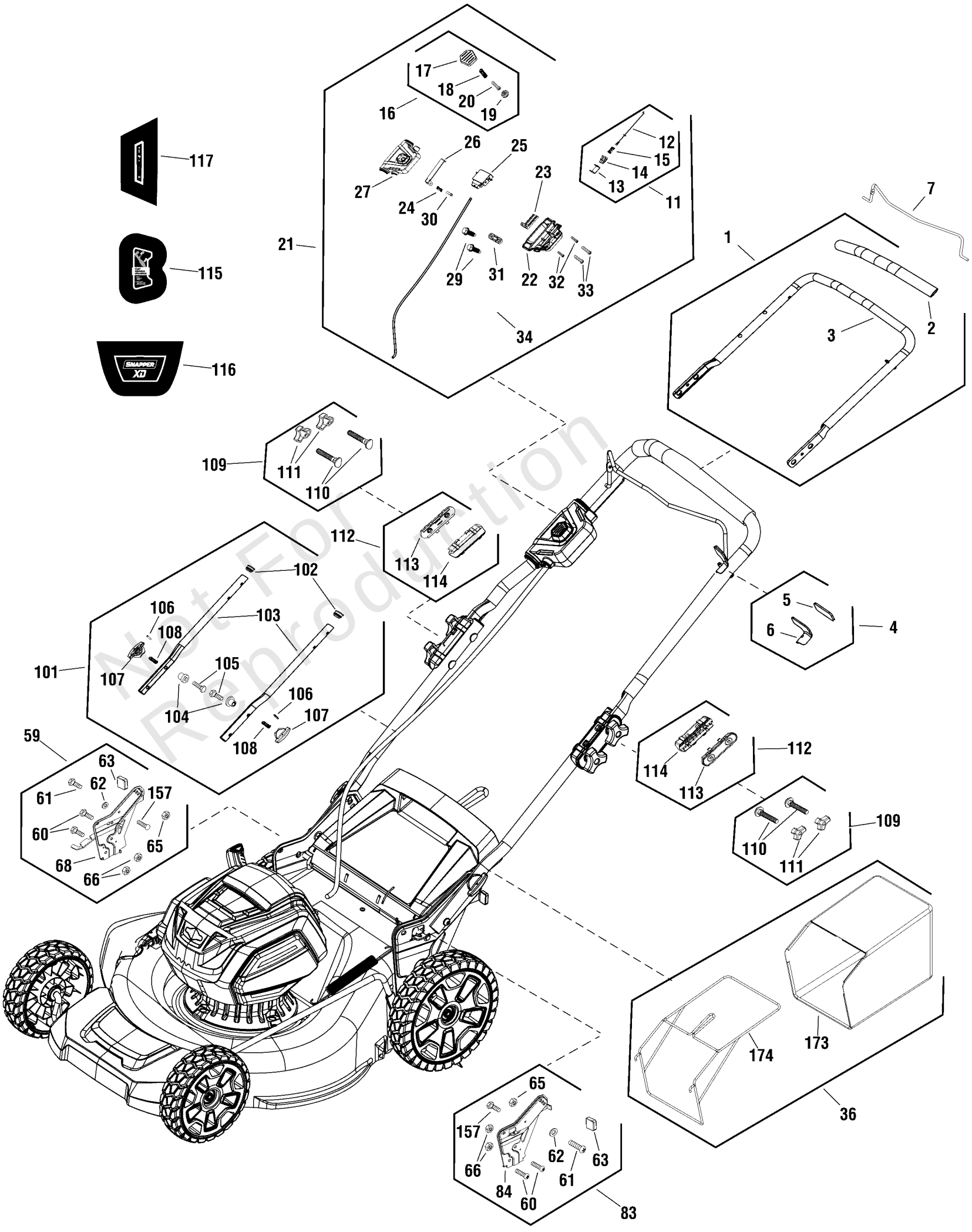

Not For Reproduction

Copyright © Briggs & Stratton. All Rights reserved

Handles Group

REF NO	PART NO	QTY	DESCRIPTION
101	770177	1	KIT, Lower Handle
102	-----	1	CAP
103	-----	1	HANDLE, Lower
104	-----	1	BUSHING
105	-----	1	SCREW
106	-----	1	PIN
107	-----	1	KNOB
108	-----	1	SPRING
109	770175	1	KIT, Hardware
110	-----	1	BOLT
111	-----	1	KNOB
112	770176	1	KIT, Handle Bracket
113	-----	1	BRACKET
114	-----	1	BRACKET
115	770491	1	DECAL, Start
116	770492	1	DECAL, XD Shroud
117	770496	1	DECAL, Charger

Not For Reproduction

Copyright © Briggs & Stratton. All Rights reserved

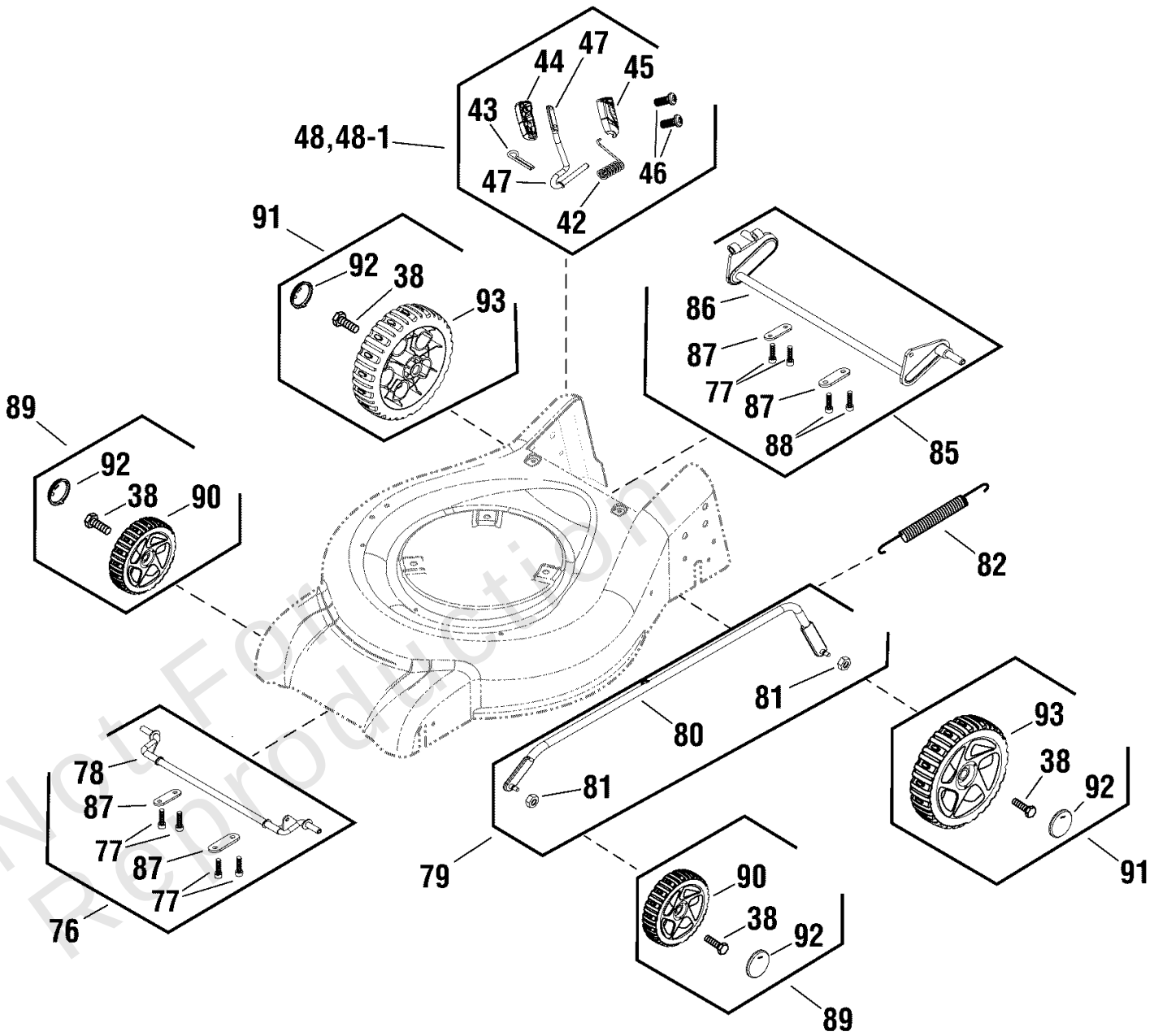

Not For Reproduction

Wheels Group

REF NO	PART NO	QTY	DESCRIPTION
48	770180	1	KIT, Handle, Height Adjust
48-1	770350	1	KIT, Handle, Height Adjust, EU
42	-----	1	SPRING
43	-----	1	PIN, Cotter
44	-----	1	HOUSING, Left
45	-----	1	HOUSING, Right
46	-----	2	SCREW, Pan Torx Self Tap, ST4.2 x 20-C
47	-----	1	ROD, Adjusting
76	770186	1	KIT, Front Axle
77	-----	4	SCREW, Pan Torx Self Tap, ST4.2 x 20-C
78	-----	1	AXLE, Front
87	-----	2	TAB
79	770185	1	KIT, Rod, Height Adjust, NA & EU
80	-----	1	ROD, Height Adjust
81	-----	2	NUT
82	770189	1	KIT, Spring
85	770184	1	KIT, Rear Axle
77	-----	2	SCREW, Pan Torx Self Tap, ST4.2 x 20-C
86	-----	1	SHAFT
87	-----	2	TAB
88	-----	2	SCREW, Pan Torx Self Tap, ST4.2 x 20-C
89	770188	1	KIT-WHEEL
38	-----	1	BOLT
90	-----	1	WHEEL, 8"
92	-----	1	COVER, Wheel
91	770187	1	KIT, Wheel, 10", NA & EU
38	-----	1	BOLT
92	-----	1	COVER, Wheel
93	-----	1	WHEEL, 10"

Not For Reproduction

Hardware Identification & Torque Specifications

Torque Specification Chart

FOR STANDARD METRIC MACHINE HARDWARE (Tolerance ± 20%)

Property Class	5.6 Class 5.6		8.8 Class 8.8		10.9 Class 10.9		12.9 Class 12.9	
Size Of Hardware	*in/lbs* **ft/lbs**	Nm.	*in/lbs* **ft/lbs**	Nm.	*in/lbs* **ft/lbs**	Nm.	*in/lbs* **ft/lbs**	Nm.
M3	*5.88*	*.56*	*13.44*	*1.28*	*19.2*	*1.80*	*22.92*	2.15
M4	*13.44*	*1.28*	*30.72*	*2.90*	*43.44*	*4.10*	*52.56*	4.95
M5	*26.4*	*2.50*	*60.96*	*5.75*	**5.97**	*8.10*	**7.15**	9.7
M6	*44.64*	*4.3*	**7.3**	*9.9*	**10.3**	*14*	**12.1**	16.5
M7	**5.2**	*7.1*	**12.1**	*16.5*	**16.9**	*23*	**19.9**	27
M8	**7.7**	*10.5*	**17.7**	*24*	**25**	*34*	**29**	40
M10	**15**	*21*	**35**	*48*	**50**	*67*	**59**	81
M12	**26**	*36*	**61**	*83*	**86.2**	*117*	**103**	140
M14	**42**	*58*	**101**	*132*	**136**	*185*	**162**	220
M16	**64**	*88*	**147**	*200*	**210**	*285*	**250**	340
M18	**89**	*121*	**202**	*275*	**287**	*390*	**346**	470
M20	**126**	*171*	**290**	*390*	**405**	*550*	**486**	660
M22	**169**	*230*	**390**	*530*	**559**	*745*	**656**	890
M24	**217**	*295*	**497**	*375*	**708**	*960*	**840**	1140
M27	**320**	*435*	**733**	*995*	**1032**	*1400*	**1239**	1680
M30	**435**	*590*	**995**	*1350*	**1401**	*1900*	**1681**	2280
M33	**590**	*800*	**1349**	*1830*	**1902**	*2580*	**2278**	3090
M36	**759**	*1030*	**1740**	*2360*	**2441**	*3310*	**2935**	3980
M39	**988**	*1340*	**2249**	*3050*	**3163**	*4290*	**3798**	5150

The guides and ruler furnished below are designed to help you select the appropriate hardware.

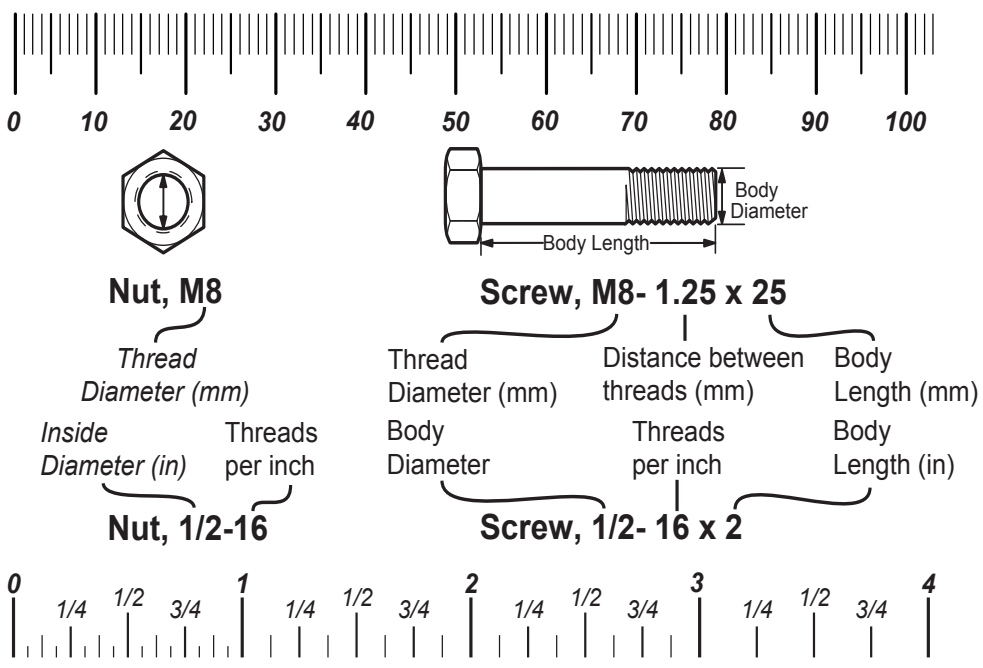

Standard Hardware Sizing

When a washer or nut is identified as **1/2"** (M8), this is the *Nominal size*, meaning the *inside diameter* is 1/2 inch (8mm metric thread diameter); if a second number is present it represents the *threads per inch* (distance between threads).

When bolt or capscrew is identified as **1/2 - 16 x 2"** (M8 - 1.25 x 50), this means the *Nominal size*, or body diameter is 1/2 inch (8mm metric thread diameter), the second number,16, represents the *threads per inch, (distance between threads).* The final number is the body length of the bolt or screw, 2 inches (50mm).

Torque Specification Chart

FOR STANDARD MACHINE HARDWARE (Tolerance ± 20%)

Hardware Grade	No Marks SAE Grade 2		SAE Grade 5		SAE Grade 8	
Size Of Hardware	*in/lbs* **ft/lbs**	Nm.	*in/lbs* **ft/lbs**	Nm.	*in/lbs* **ft/lbs**	Nm.
8-32	*19*	2.1	*30*	3.4	*41*	4.6
8-36	*20*	2.3	*31*	3.5	*43*	4.9
10-24	*27*	3.1	*43*	4.9	*60*	6.8
10-32	*31*	3.5	*49*	5.5	*68*	7.7
1/4-20	*66*	7.6	**8**	10.9	**12**	16.3
1/4-28	*76*	8.6	**10**	13.6	**14**	19.0
5/16-18	**11**	15.0	**17**	23.1	**25**	34.0
5/16-24	**12**	16.3	**19**	25.8	**29**	34.0
3/8-16	**20**	27.2	**30**	40.8	**45**	61.2
3/8-24	**23**	31.3	**35**	47.6	**50**	68.0
7/16-14	**30**	40.8	**50**	68.0	**70**	95.2
7/16-20	**35**	47.6	**55**	74.8	**80**	108.8
1/2-13	**50**	68.0	**75**	102.0	**110**	149.6
1/2-20	**55**	74.8	**90**	122.4	**120**	163.2
9/16-12	**65**	88.4	**110**	149.6	**150**	204.0
9/16-18	**75**	102.0	**120**	163.2	**170**	231.2
5/8-11	**90**	122.4	**150**	204.0	**220**	299.2
5/8-18	**100**	136	**180**	244.8	**240**	326.4
3/4-10	**160**	217.6	**260**	353.6	**386**	525.0
3/4-16	**180**	244.8	**300**	408.0	**420**	571.2
7/8-9	**140**	190.4	**400**	544.0	**600**	816.0
7/8-14	**155**	210.8	**440**	598.4	**660**	897.6
1-8	**220**	299.2	**580**	788.8	**900**	1,244.0
1-12	**240**	326.4	**640**	870.4	**1,000**	1,360.0

NOTES

1. These torque values are to be used for all hardware excluding: locknuts, self-tapping screws, thread forming screws, sheet metal screws and socket head setscrews.
2. Recommended seating torque values for locknuts:
   a. for prevailing torque locknuts - use 65% of grade 5 torques.
   b. for flange whizlock nuts and screws - use 135% of grade 5 torques.
3. Unless otherwise noted on assembly drawings, all torque values must meet this specification.

Common Hardware Types

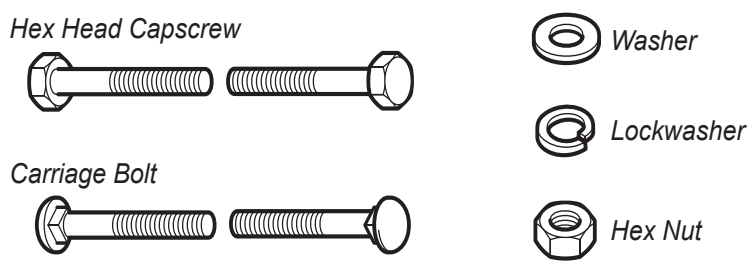

Wrench & Fastener Size Guide

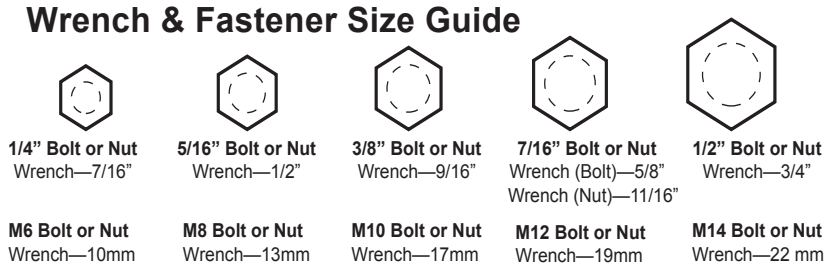

Copyright © Briggs & Stratton. All Rights reserved