Parts Manual

Mfg. No: 5901498

SW25CCKAV1948, 48" Walk Behind Mower

Copyright © Briggs & Stratton. All Rights reserved

5600861 - Kit, Bagger Counter Spring, W25. . . . . .
5600859 - Kit, Weight Bracket, W25. . . . . .
5600563 - 48" Mulch Kit, WALK BEHIND (SW25, SW35). . . . . .
5105070 - Catcher, Steel Frame / Aluminum Mesh. . . . . .
5105072 - Mounting Kit, Catcher for 48" Decks (FW25, SW25, FW35, SW35). . . . . .

Not For Reproduction

Copyright © Briggs & Stratton. All Rights reserved

Model Components — Page

48" Mower Deck - Housing, Covers, Spindles & Blades. . . . 4
48" Mower Deck - Pulleys, Belt & Idler Arm S/N: 2017170234 & Below. . . . 6
48" Mower Deck - Pulleys, Belt & Idler Arm S/N: 2017170235 & Above. . . . 8
48" Mower Deck - Rollers. . . . 10
Decal Group - Brand & Model. . . . 12
Decal Group - Safety & Operation. . . . 14
Deck Lift Group. . . . 16
Electrical Group. . . . 18
Electrical Schematic - Charging Circuit Electric Start S/N: 2017711285 & Below. . . . 22
Electrical Schematic - Charging Circuit Electric Start S/N: 2017711286 to 2017954955. . . . 24
Electrical Schematic - Charging Circuit Electric Start S/N: 2017954956 & Above. . . . 26
Electrical Schematic - Cranking Circuit Electric Start S/N: 2017711285 & Below. . . . 28
Electrical Schematic - Cranking Circuit Electric Start S/N: 2017711286 to 2017954955. . . . 30
Electrical Schematic - Cranking Circuit Electric Start S/N: 2017954956 & Above. . . . 32
Electrical Schematic - Engine Op. Pres. Circuit Electric Start S/N: 2017711285 & Below. . . . 34
Electrical Schematic - Engine Op. Pres. Circuit Electric Start S/N: 2017711286 to 2017954955. . . . 36
Electrical Schematic - Engine Op. Pres. Circuit Electric Start S/N: 2017954956 & Above. . . . 38
Electrical Schematic - PTO Op. Pres. Circuit Electric Start S/N: 2017711285 & Below. . . . 40
Electrical Schematic - PTO Op. Pres. Circuit Electric Start S/N: 2017711286 to 2017954955. . . . 42
Electrical Schematic - PTO Op. Pres. Circuit Electric Start S/N: 2017954956 & Above. . . . 44
Engine & PTO Group. . . . 46
Engine Service Parts - Kawasaki (FS481V - FS730V). . . . 48
Fuel Tank & Mount, Fuel Supply, and EVAP Group (No Canister). . . . 50
Handle Bar & Instrument Control Group. . . . 52
Hydraulic Group. . . . 54
Main Frame & Front Caster Group. . . . 56
Motion Control Group - Lower. . . . 58
Motion Control Group - Spring Assemblies. . . . 60
Motion Control Group - Upper (Centralized Controls). . . . 62
Parking Brake Group. . . . 66
Transaxle Drive Group. . . . 68
Wheel & Tire Group. . . . 70
Torque Specification Chart. . . . 72

Not For Reproduction

Copyright © Briggs & Stratton. All Rights reserved

48" Mower Deck - Housing, Covers, Spindles & Blades

Note: Unless noted otherwise, use the standard torque specifications

Mfg. No: 5901498

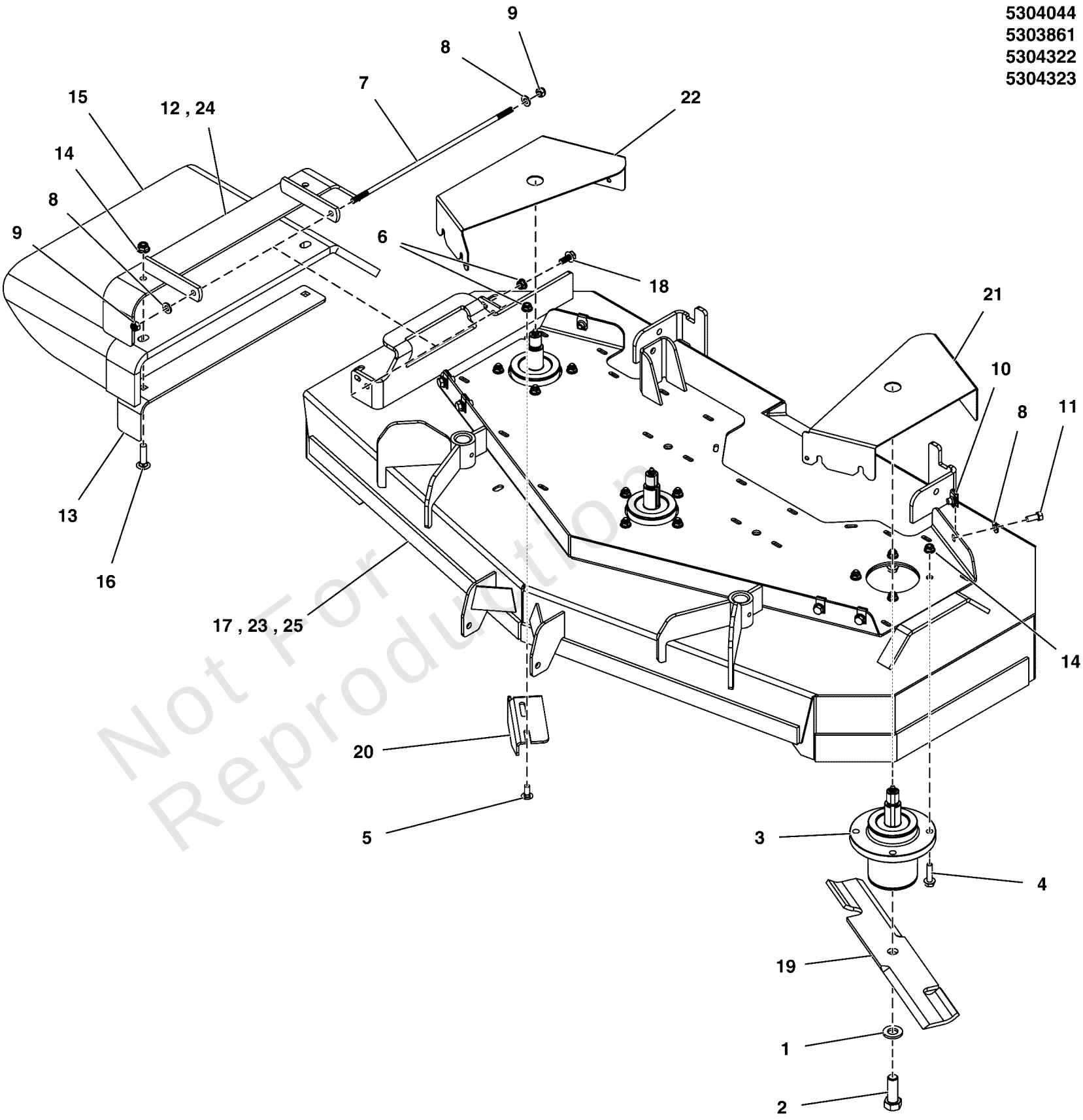

Not For Reproduction

Copyright © Briggs & Stratton. All Rights reserved

48" Mower Deck - Housing, Covers, Spindles & Blades

REF NO	PART NO	QTY	DESCRIPTION
1	5025477	3	WASHER, BLADE BOLT, 9/16" F436, CZ
2	5025320X14	3	BOLT, 5/8-11 X 1-3/4 GD8
3	5061095	3	SPINDLE, ASSM, ALUMINUM - 5.25
4	5025390X10	12	BOLT, 3/8-16 X 1-1/4, FLANGE, GD5, CZ
5	5025145X6	2	BOLT, 5/16-18 X 3/4, CARRIAGE
6	5025392	3	NUT, 5/16-18 HEX NYLOCK FLANGE
7	5042555	1	ROD, 5/16 X 13.75, TBE, CZ
8	5025155	8	WASHER, 5/16" SAE
9	5025045	2	NUT, 5/16-24 HEX NYLON LOCK
10	5022308	6	BODY CLIP, 5/16-18-7GA MATERIAL
11	5025011X6	6	BOLT, 5/16-18 X 3/4 GD5
12	5413404A	1	WELD, MOUNT, DISCHARGE CHUTE - BLK -(S/N: 2017555756 & Below)
13	5413401A	1	SUPPORT, DISCHARGE CHUTE - BLK
14	5025394	14	NUT, 3/8-16 HEX NYLOCK FLANGE
15	5413498	1	CHUTE, RUBBER DISCHARGE CHUTE (5104441)
16	5025146X12	2	BOLT, 3/8-16 X 1-1/2, CARRIAGE, GD5, CZ
17	5600851	1	DECK SHELL W/DECALS, 48, FW25 (5412960B) -(S/N: 2017170234 & Below)
18	5025011X6	1	BOLT, 5/16-18 X 3/4 GD5
19	5101986S	1	BLADES, SET OF THREE (3); 16.25 X.25 X 2.5, 1 X 3.5
20	5401344A	1	PLATE, DEFLECTOR - BLK
21	5413006B	1	GUARD, DECK, 48, LH - RED
22	5413005B	1	GUARD, DECK, 48, RH - RED
23	5600895	1	DECK SHELL W/ DECALS, 48, FW25 (5414518B) -(S/N: 2017170235 & 2017555756)
24	5413403A	1	WELD, MOUNT, DISCHARGE CHUTE - BLK -(S/N: 2017555757 & Above)
25	5601007	1	DECK SHELL W/DECALS, FW25-48 (5415572B) -(S/N: 2017555757 & Above)

Not For Reproduction

Copyright © Briggs & Stratton. All Rights reserved

48" Mower Deck - Pulleys, Belt & Idler Arm S/N: 2017170234 & Below

Note: Unless noted otherwise, use the standard torque specifications

Mfg. No: 5901498

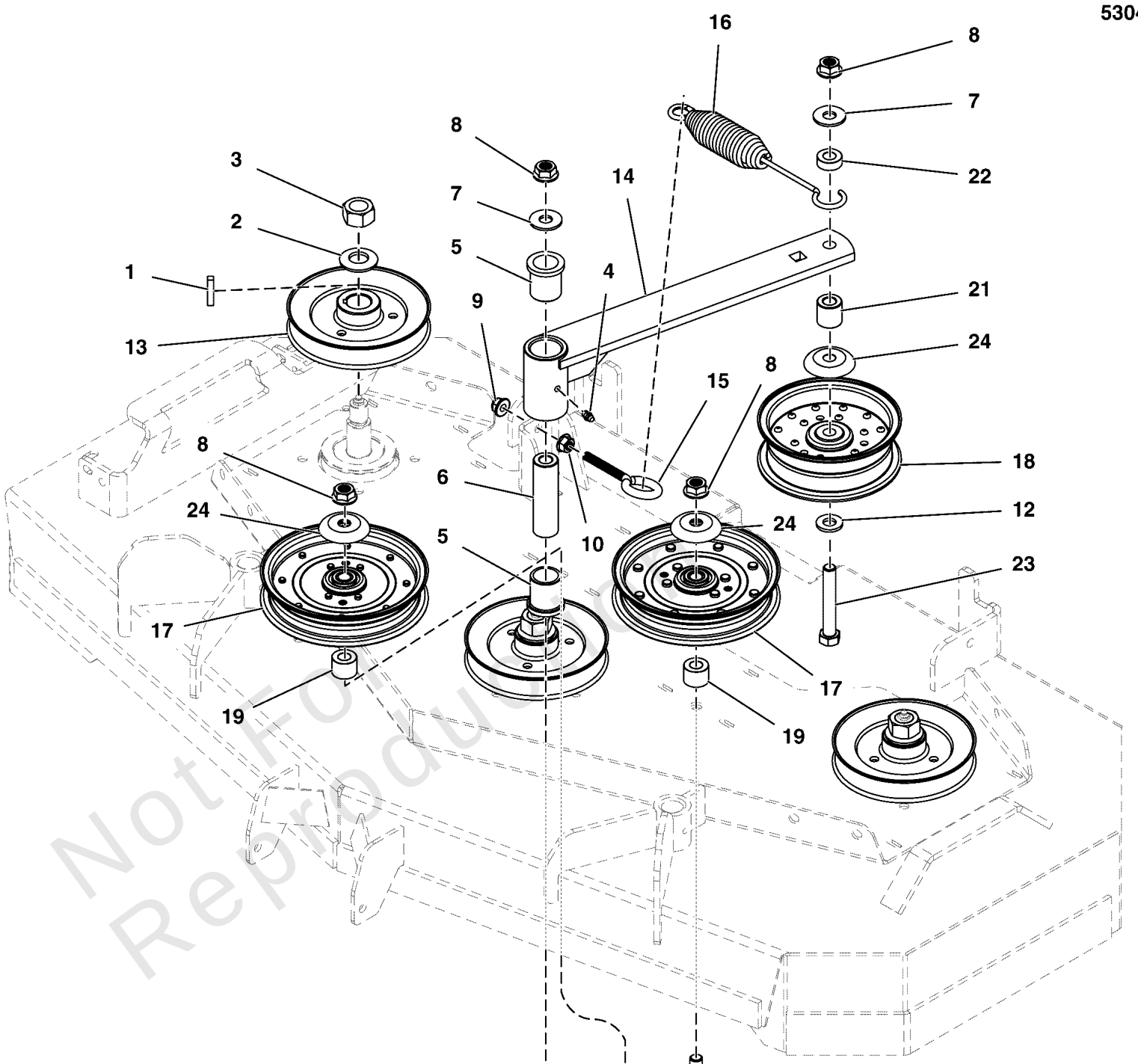

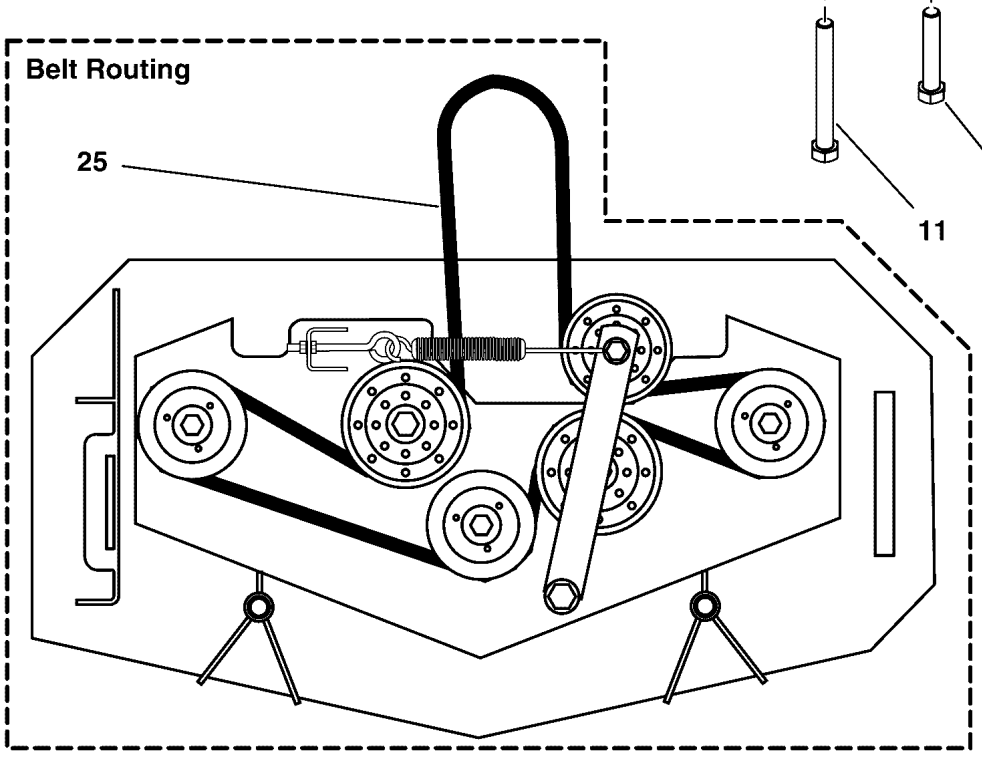

Not For Reproduction

Copyright © Briggs & Stratton. All Rights reserved

48" Mower Deck - Pulleys, Belt & Idler Arm S/N: 2017170234 & Below

REF NO	PART NO	QTY	DESCRIPTION
1	5050407X10	3	KEY, 1/4" SQ. X 1-1/4
2	5025406	3	WASHER, 3/4 BELLEVILLE CL/ZC
3	5025405	3	NUT, 3/4-16 Hex
4	5020095	1	GREASE FITTING, 1/4-28 Straight
5	5021541	2	BUSHING, FLANGE
6	5045022	1	SPACER, .52 x 1.00 x 3.50
7	5025150	2	WASHER, 1/2" USSZ
8	5025396	4	NUT, Hex Flange, Nylock, 1/2-13
9	5025394	1	NUT, 3/8 - 16 HEX NYLOCK FLANGE
10	5025128	1	NUT, 3/8-16 Hex Large Serrated Flange
11	5025017X40	1	BOLT, 1/2-13 X 5" GD5 YZ
12	5025440	1	WASHER, 1/2" GD9 YZ
13	5023175	3	PULLEY, 5.540OB X .985ID, SINGLE B-SEC
14	5413655A	1	WELD, IDLER ARM, 13.50 - BLK
15	5025429	1	EYEBOLT, 3/8-16 X 4, 2.13THRD, .75EYE, C
16	5100632	1	SPRING-EXT, 1.25OD X 9.3LG X .142WR, BLK
17	-----	2	Replace with: Pulley #5104717 & Debris Shield #5105145
18	5101312	1	PULLEY, IDLER, 5.00 WIDE W/ .51 BORE
19	5046916	2	SPACER, .51 x 1.75 x .75
20	5025017X22	2	BOLT, 1/2-13 X 2-3/4 GD5 CZ
21	5049777	1	SPACER, .52 x 1.00 x 1.00
22	5044609	1	SPACER, .52 X 1.00 X .38, CZ
23	5025017X28	1	BOLT, 1/2-13 X 3-1/2, HEX HD, GD5, CZ (SV)
24	5101103	3	SHIELD, PULLEY BEARING, CZ
25	5104393	1	BELT, B-SEC, 129.15"EL, ARAMID, WRAPED

Not For Reproduction

Copyright © Briggs & Stratton. All Rights reserved

48" Mower Deck - Pulleys, Belt & Idler Arm S/N: 2017170235 & Above

Note: Unless noted otherwise, use the standard torque specifications

Mfg. No: 5901498

5304046A
5304298A

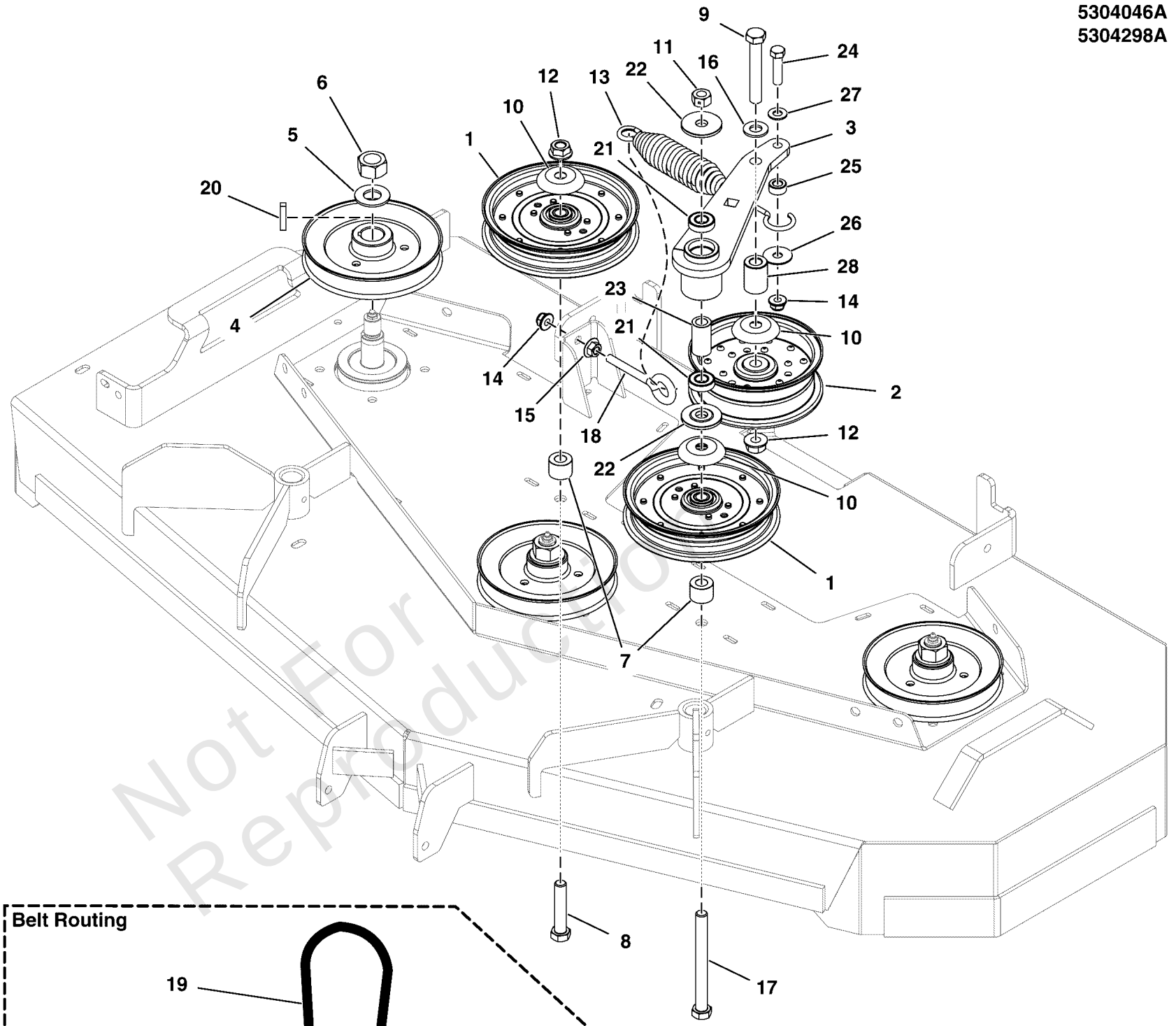

Not For Reproduction

Belt Routing

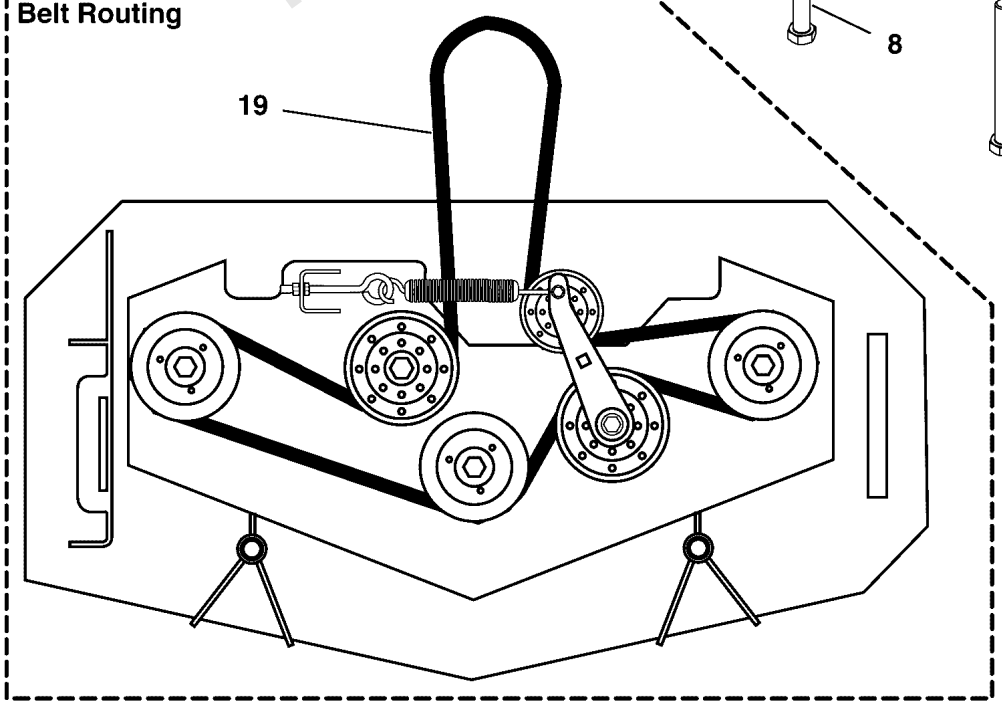

Copyright © Briggs & Stratton. All Rights reserved

48" Mower Deck - Pulleys, Belt & Idler Arm S/N: 2017170235 & Above

REF NO	PART NO	QTY	DESCRIPTION
1	-----	2	Replace with: Pulley #5104717 & Debris Shield #5105145
2	5101312	1	PULLEY, IDLER, 5.00 WIDE W/ .51 BORE
3	5414690A	1	WELD, IDLER ARM, 7.50, BEARING - BLK
4	5023175	3	PULLEY, 5.540OB X .985ID, SINGLE B-SEC
5	5025406	3	WASHER, 3/4 BELLEVILLE CL/ZC
6	5025405	3	NUT, 3/4-16 Hex
7	5046916	2	SPACER, .51 x 1.75 x .75
8	5025017X20	1	BOLT, 1/2-13 X 2-1/2" GD5 CZ
9	5025017X26	1	BOLT, 1/2-13 X 3-1/4, HEX HD, GD5, CZ (SV)
10	5101103	3	SHIELD, PULLEY BEARING, CZ
11	5025332	1	NUT, 1/2-13 Hex Side Lock
12	5025396	2	NUT, Hex Flange, Nylock, 1/2-13
13	5100632	1	SPRING-EXT, 1.25OD X 9.3LG X .142WR, BLK
14	5025394	2	NUT, 3/8 - 16 HEX NYLOCK FLANGE
15	5025128	1	NUT, 3/8-16 Hex Large Serrated Flange
16	5025158	1	WASHER, 1/2 SAE
17	5025017X40	1	BOLT, 1/2-13 X 5" GD5 YZ
18	5025429	1	EYEBOLT, 3/8-16 X 4, 2.13THRD, .75EYE, C
19	5104393	1	BELT, B-SEC, 129.15"EL, ARAMID, WRAPED
20	5050407X10	3	KEY, 1/4" SQ. X 1-1/4
21	7078243	2	BEARING, BALL, AXLE
22	5103262	2	SPACER, IDLER ARM, 1/2, PM
23	5103812	1	SPACER, .52 X .84 X 1.53, PM
24	5025013X12	1	BOLT, 3/8-16 X 1-1/2" GD5 CZ
25	5044933	1	SPACER, .39 X .75 X .38, PM, CZ
26	5025165	1	WASHER, 3/8" Fender
27	5025156	1	WASHER, 3/8 SAE
28	5101207	1	SPACER, .52 X 1.00 X 1.38 YZ

Not For Reproduction

Copyright © Briggs & Stratton. All Rights reserved

48" Mower Deck - Rollers

Note: Unless noted otherwise, use the standard torque specifications

Mfg. No: 5901498

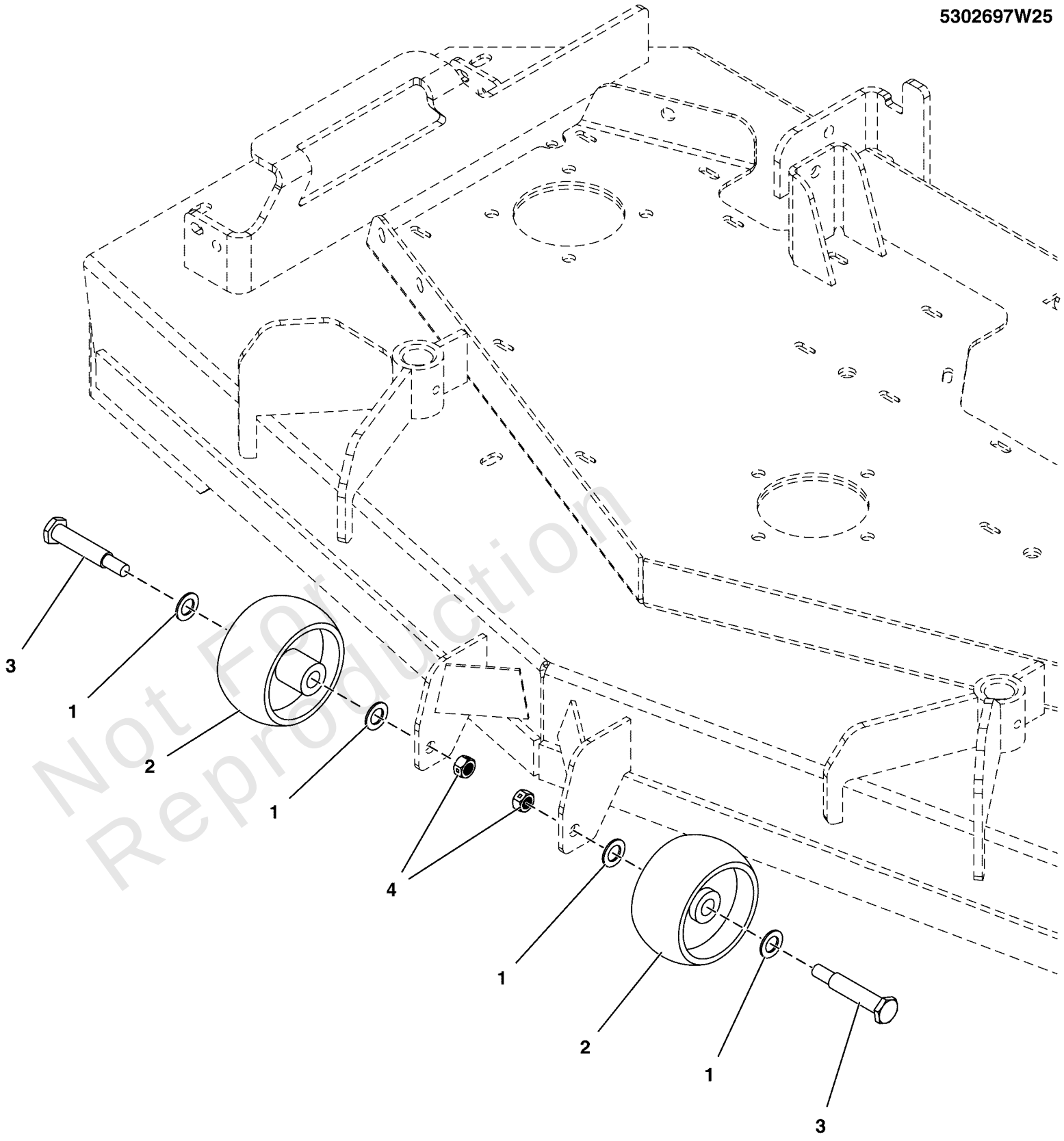

Not For Reproduction

Copyright © Briggs & Stratton. All Rights reserved

48" Mower Deck - Rollers

REF NO	PART NO	QTY	DESCRIPTION
1	80003590	4	WASHER,.516IDX.875ODX.06,FLAT,ZC/CL
2	1714760	2	WHEEL- 2.00 WIDE 3.88 DIA 0.531ID POLY
3	2108765	2	BOLT-WHEEL 3/8-16X2.781 .750 THRD
4	5025100	2	NUT, 3/8-16 HEX SIDE LOCK

Not For Reproduction

Copyright © Briggs & Stratton. All Rights reserved

5304039
5304041

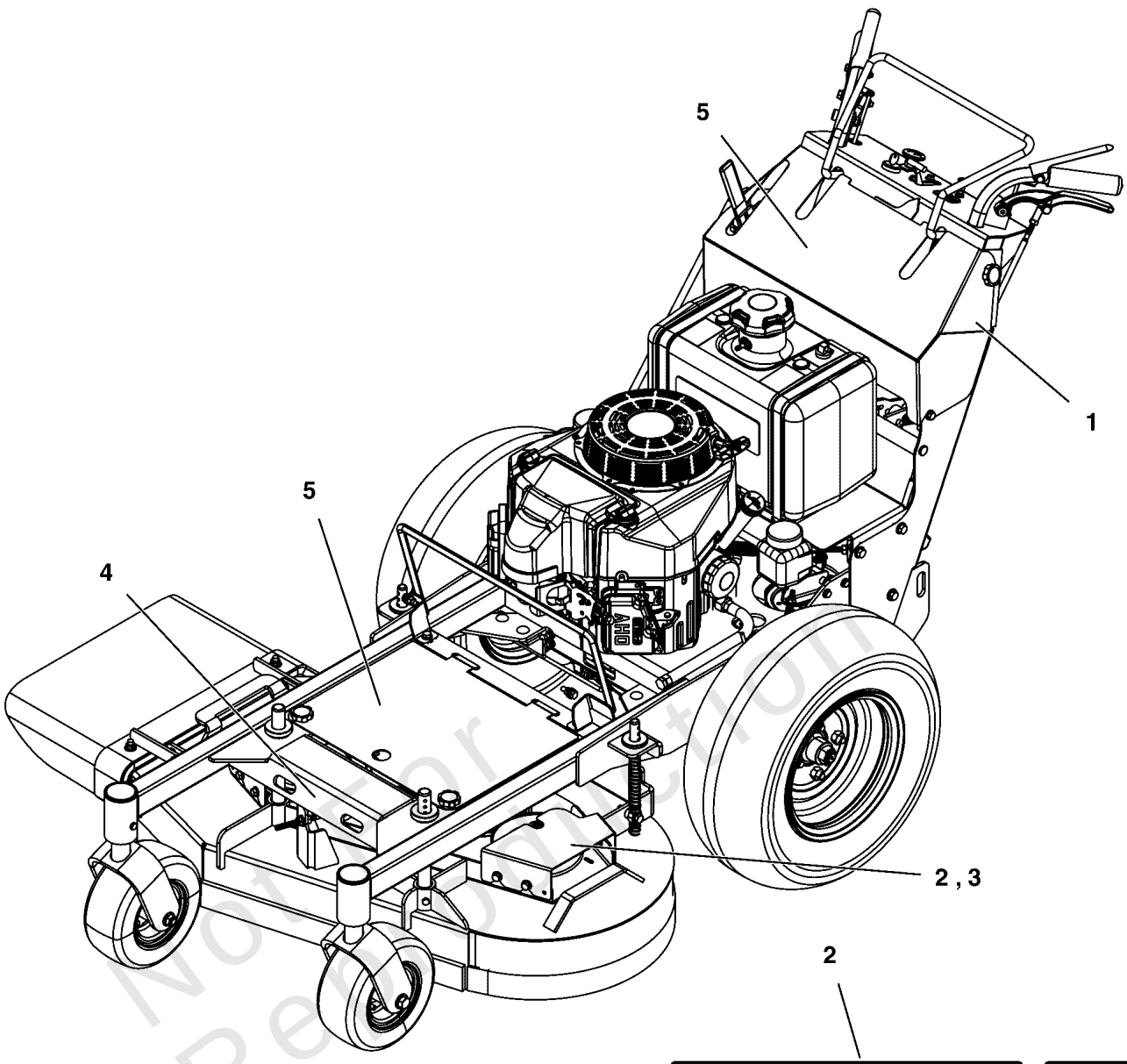

2

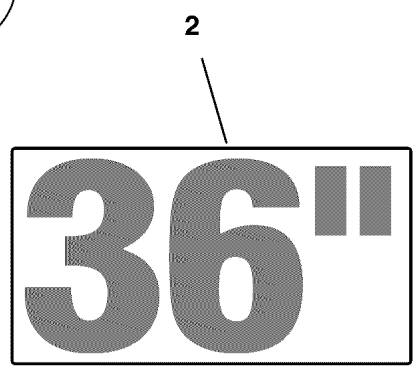

3

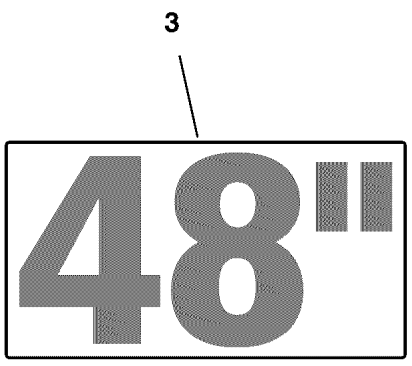

4

5

Copyright © Briggs & Stratton. All Rights reserved

Decal Group - Brand & Model

REF NO	PART NO	QTY	DESCRIPTION
1	5104518	1	DECAL, CENTRALIZED CONTROLS -(Models with Centralized Controls Only)
2	5101322	1	DECAL, 36 -(36" Models)
3	5022811	1	DECAL, 48 -(48" Models)
4	5104485	1	DECAL, MODEL SERIES, SW25
5	5104025	2	DECAL, SNAPPER PRO LOGO, LARGE

Not For Reproduction

Copyright © Briggs & Stratton. All Rights reserved

5304038

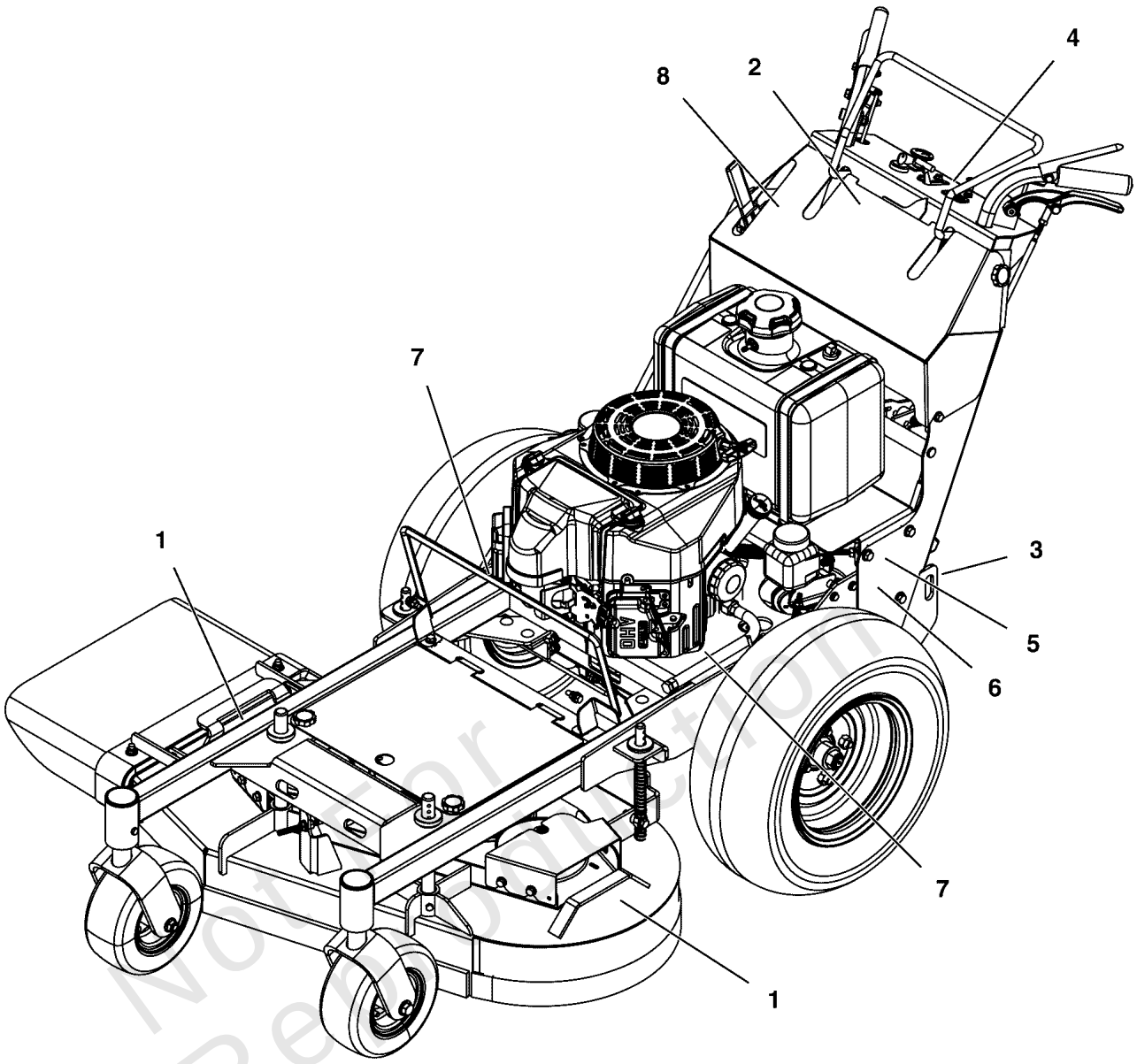

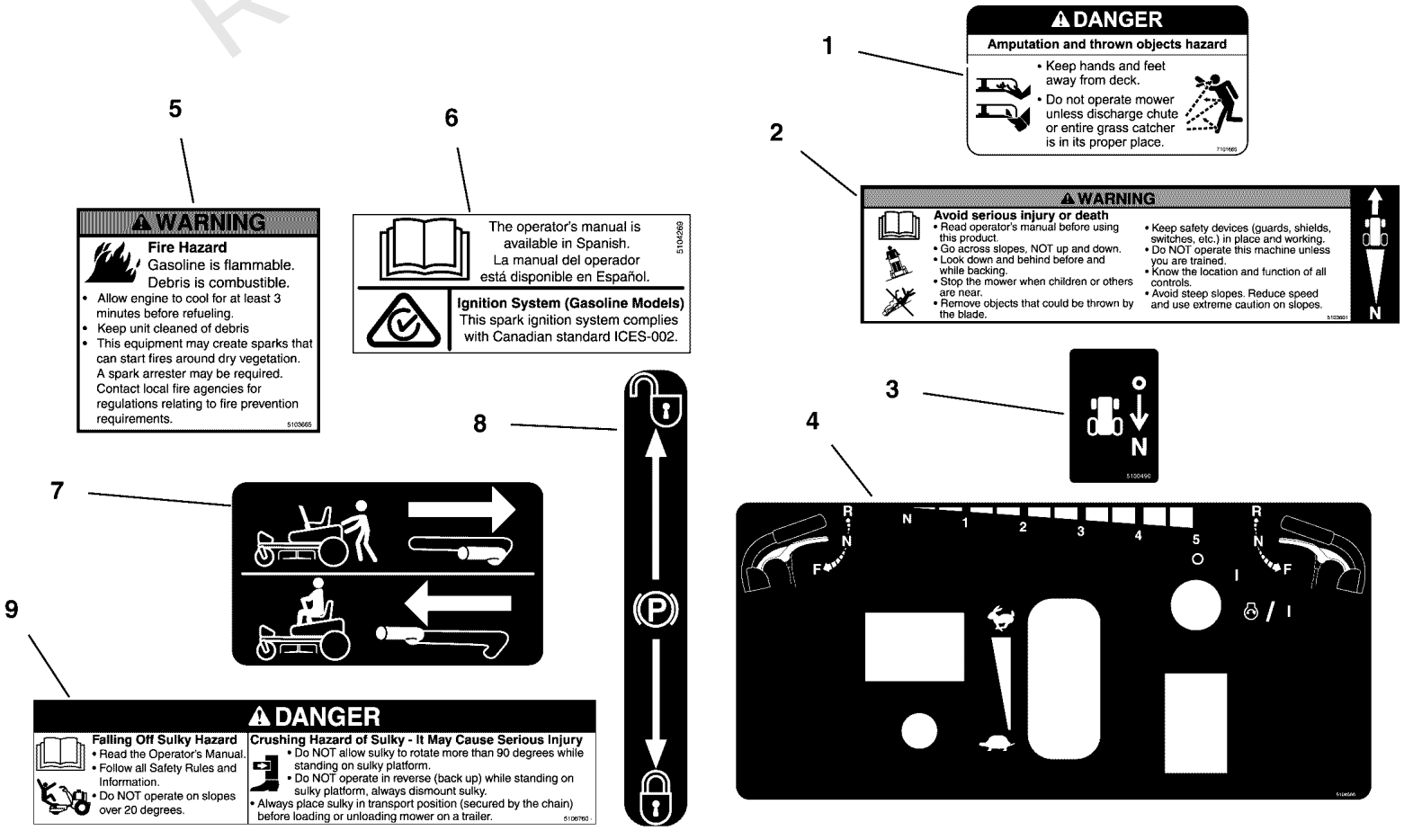

Copyright © Briggs & Stratton. All Rights reserved

Decal Group - Safety & Operation

REF NO	PART NO	QTY	DESCRIPTION
1	7101665	2	DECAL, DANGER DO NOT OPERATE W/O DEFLECT
2	5103601	1	DECAL, WARNING, WALKS
3	5100490	2	DECAL, PEDAL
4	5104566	1	DECAL, DASH PANEL, WKB, MAN/ELEC START
5	5103665	1	DECAL, FIRE HARARD, 3.25W X 3.0H
6	5104269	1	DECAL, SPANISH MANUAL, IGES, C-TICK
7	5104268	2	DECAL, TRANSAXLE RELEASE, WB
8	5102628	1	DECAL, PARKING BRAKE SYMBOLS
9	5106760	1	DECAL, MAIN SAFETY, SULKY -(S/N: 4000036919 & Above)(Located on the rear of the engine deck.)

Not For Reproduction

Copyright © Briggs & Stratton. All Rights reserved

Deck Lift Group

Note: Unless noted otherwise, use the standard torque specifications

Mfg. No: 5901498

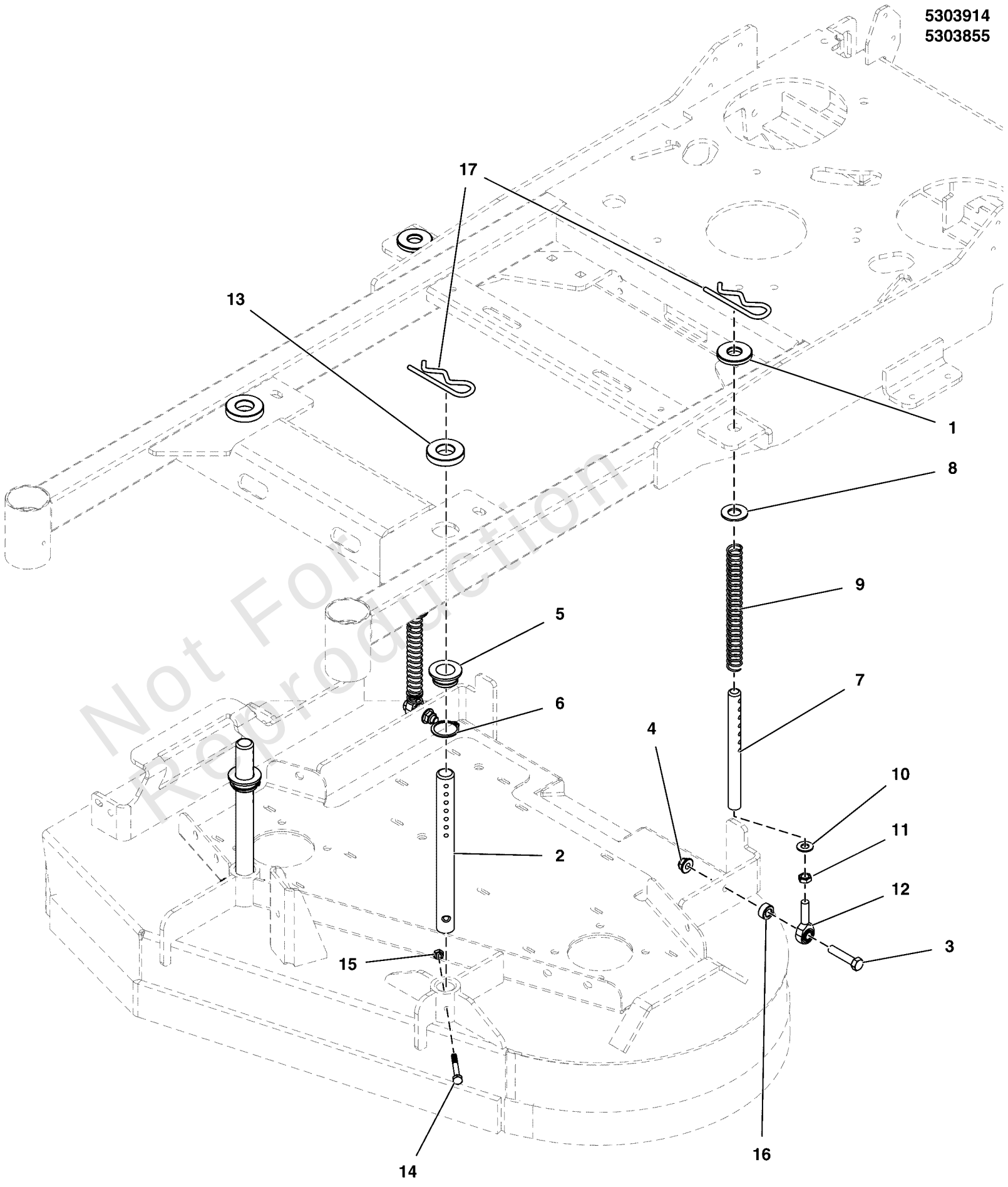

Not For Reproduction

Copyright © Briggs & Stratton. All Rights reserved

Deck Lift Group

REF NO	PART NO	QTY	DESCRIPTION
1	5104400	2	SPACER, .688 X 1.750 X .25, CZ
2	5104346	2	SHAFT, FRONT DECK LIFT, SW25/FW25
3	5025013X14	2	BOLT, 3/8-16 X 1-3/4" GD5 CZ
4	5025394	2	NUT, 3/8-16 HEX NYLOCK FLANGE
5	5104413	2	BUSHING, FRONT DECK LIFT
6	5025614	2	SNAP RING, EXTERNAL, 1-1/4 SHAFT, BLK
7	5104345	2	SHAFT, REAR DECK LIFT, SW25/FW25
8	5025281	2	WASHER, 5/8 SAE -(36" Mower Decks Only)
9	5104374	2	SPRING,COMP,.645IDX8.00LGX.080WR,BLK E-C -(36" Mower Decks Only)
10	5025156	2	WASHER, 3/8 SAE -(36" Mower Decks Only)
11	5025309	2	NUT, 3/8-24 HEX JAM
12	5021124	2	BALL JOINT, 3/8-24 MALE
13	5104347	2	SPACER, .89 X 1.88 X .38, CZ
14	5025010X16	2	BOLT, 1/4-20 X 2”, GD5
15	5025095	2	NUT, 1/4-20 HEX NYLON LOCK
16	5044933	2	SPACER, .39 X .75 X .38, PM, CZ
17	5025612	4	PIN, HAIR, .1719 X 3-1/4, 7/8 EYE, CZ

Not For Reproduction

Copyright © Briggs & Stratton. All Rights reserved

Electrical Group

Note: Unless noted otherwise, use the standard torque specifications

Mfg. No: 5901498

26 - Wire Harness, Kawasaki Electric Start, W25 (S/N: 2017711285 & Below)

27 - Wire Harness, Kawasaki Manual Start, W25 (S/N: 2017983332 & Below)

29 - Wire Harness, Kawasaki Electric Start, W25 (S/N: 2017711286 - 2017954955)

33 - Harness, Walk Behind, Wiring, Electric Start (S/N: 2017954956 & Above)

34 - Wire Harness, Kawasaki Jumper

35 - Harness, Walk Behind Wiring, Manual Start (S/N: 2017983333 & Above)

5303856
5303857

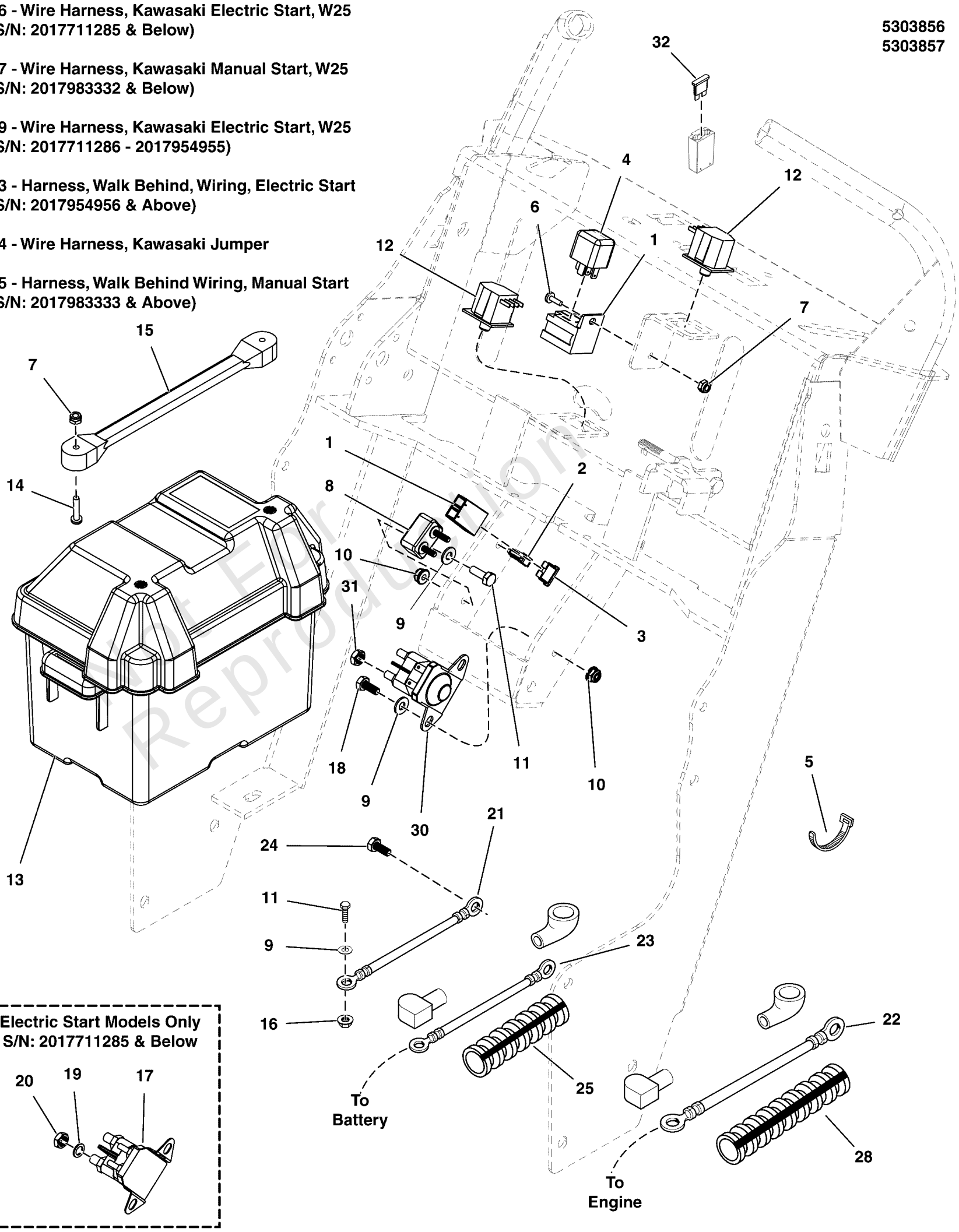

Electric Start Models Only
S/N: 2017711285 & Below

Not For Reproduction

Electrical Group

REF NO	PART NO	QTY	DESCRIPTION
1	-----	1	SEE WIRE HARNESS PART NUMBER
2	5103761	2	FIR TREE MOUNT, PACKARD -(Qty: 1 - Manual Start Models)
3	5101935	1	FUSE, ATO-15 (15 AMP)(SV)
4	5021766	1	RELAY, 12 VOLT, 40 AMP
5	5021029	8	TIE, SELF-LOCKING, 12"
6	5025179X4	1	SCREW, #10-24 X 1/2" ROUND PHILLIPS
7	5025271	3	NUT, Hex, Nylon Lock, #10-24 -(Qty: 1 - Manual Start Models)
8	1665238	1	BREAKER-CIRCUIT 12VOLT 20AMPS W/TAB -(Electric Start Models Only - S/N: 2017711285 & Below)
9	5025154	5	WASHER, 1/4 SAE -(Electric Start Models Only)
10	5025391	3	NUT, 1/4-20 Hex Nylock Flange -(Electric Start Models Only)
11	5025010X6	3	BOLT, 1/4"-20 X 3/4" GD5 YZ -(Electric Start Models Only)
12	5101280	2	SWITCH, PLUNGER, NO/NC SNAP-IN, LOW PROFILE
13	5100688	1	BATTERY BOX, W/ DRAIN HOLE -(Electric Start Models Only)
14	5025270	2	SCREW, #10-24 X 1 RS, CZ -(Electric Start Models Only)
15	5021670	1	STRAP, RUBBER -(Electric Start Models Only)
16	5025126	2	NUT, 1/4-20 HEX SERR. FLANGE -(Electric Start Models Only)
17	1724815	1	SOLENOID-4 POLE 12 VOLT DC (TROMBETTA) -(Electric Start Models Only - S/N: 2017711285 & Below)
18	-----	4	HHCS, 1/4-20 X 0.625, GR5, ZINC/CLEAR -(Electric Start Models Only)
19	5023217	2	WASHER, Light Lock, 5/16 -(Electric Start Models Only - S/N: 2017711285 & Below)
20	5023216	2	NUT, Hex Jam, 5/16-24 -(Electric Start Models Only - S/N: 2017711285 & Below)
21	5021406	1	BATTERY CABLE, NEG, 22, 1/4-5/16 -(Electric Start Models Only)
22	5023488	1	BATTERY CABLE, POS, 22, 1/4-5/16 -(Electric Start Models Only)
23	5047136	1	BATTERY CABLE, POS, 15, 1/4-5/16 -(Electric Start Models Only)
24	5025249	1	BOLT, M8-1.25 X 20 MM GD 8.8
25	5050927X10	1	WIRE LOOM, 3/8 ID X 10 IN -(Electric Start Models Only)
26	5412954	1	WIRE HARNESS, KAWI ELEC START, SW25 -(Electric Start Models Only - S/N: 2017711285 & Below)
27	5412955	1	WIRE HARNESS, KAWI MANUAL START, SW25 -(Manual Start Models Only - S/N: 2017983332 & Below)
28	5050927X16	1	WIRE LOOM, 3/8 ID X 16 IN -(Electric Start Models Only)
29	5416152	1	WIRE HARNESS, W25, KAWI ELECTRIC -(Electric Start Models Only - S/N: 2017711286 - 2017954955)
30	1755382	1	SOLENOID, STD-BRACKET, 2-SPADE -(Electric Start Models Only - S/N: 2017711286 & Above)
31	80003921	1	NUT,1/4-20,KEPS,CONICAL WSHR,ZC/CL -(Electric Start Models Only - S/N: 2017711286 & Above)
32	5021603	1	FUSE, ATO-20 (20 AMP)(SV) -(Electric Start Models Only - S/N: 2017711286 & Above)
33	5105538	1	HARNESS, WALK BEHIND, WIRING -(Electric Start Models Only - S/N: 201954956 & Above)

Not For Reproduction

Copyright © Briggs & Stratton. All Rights reserved

Electrical Group

Note: Unless noted otherwise, use the standard torque specifications

Mfg. No: 5901498

26 - Wire Harness, Kawasaki Electric Start, W25 (S/N: 2017711285 & Below)

27 - Wire Harness, Kawasaki Manual Start, W25 (S/N: 2017983332 & Below)

29 - Wire Harness, Kawasaki Electric Start, W25 (S/N: 2017711286 - 2017954955)

33 - Harness, Walk Behind, Wiring, Electric Start (S/N: 2017954956 & Above)

34 - Wire Harness, Kawasaki Jumper

35 - Harness, Walk Behind Wiring, Manual Start (S/N: 2017983333 & Above)

5303856
5303857

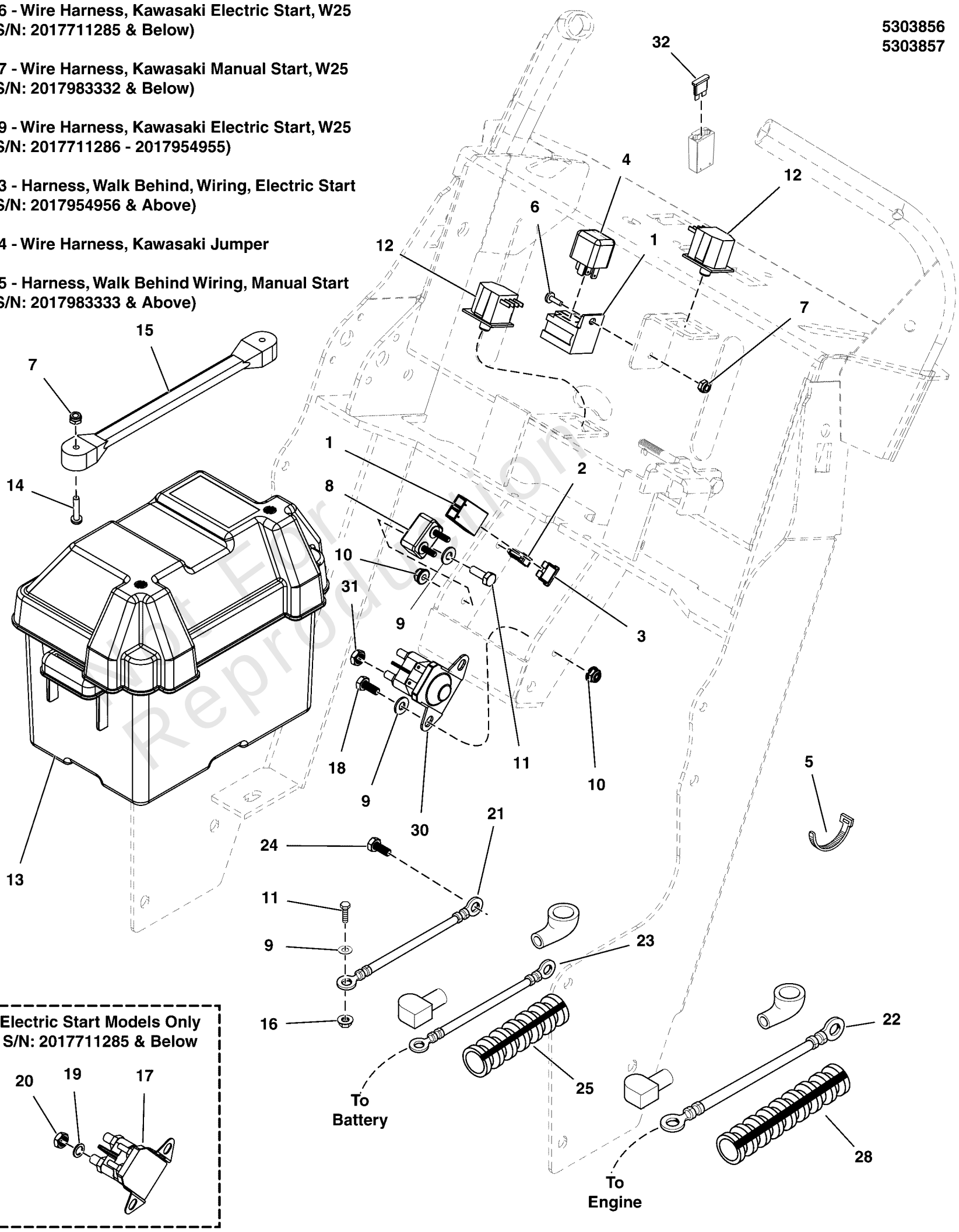

Not For Reproduction

Copyright © Briggs & Stratton. All Rights reserved

Electrical Group

REF NO	PART NO	QTY	DESCRIPTION
34	5104811	1	WIRE HARNESS, JUMPER, KAWI -(Electric Start Models Only - S/N: 201954956 & Above)
35	5105539	1	HARNESS, MANUAL START WALK WIRING -(Manual Start Models Only - S/N: 2017983333 & Above)

Not For Reproduction

Copyright © Briggs & Stratton. All Rights reserved

Electrical Schematic - Charging Circuit Electric Start S/N: 2017711285 & Below

Note: Unless noted otherwise, use the standard torque specifications

Mfg. No: 5901498

Main Wire Harness (Electric Start)

5412954

*This switch uses a “shorting” connector. When the connector is unplugged, the terminals going to the identified pole will have continuity.

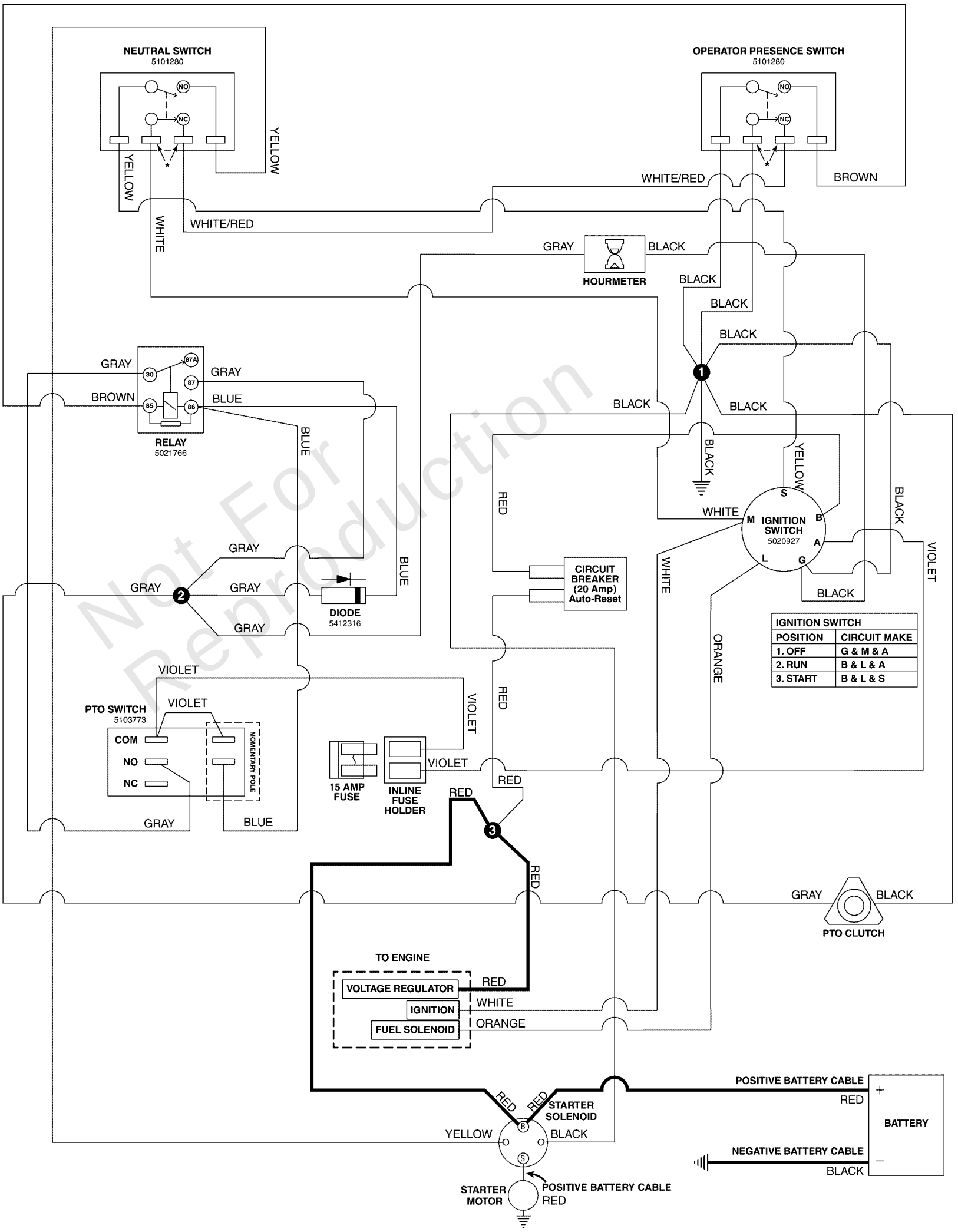

Not For Reproduction

Copyright © Briggs & Stratton. All Rights reserved

Electrical Schematic - Charging Circuit Electric Start S/N: 2017711285 & Below

REF NO	PART NO	QTY	DESCRIPTION
5412954	5412954	1	WIRE HARNESS, KAWI ELEC START, SW25

Not For Reproduction

Copyright © Briggs & Stratton. All Rights reserved

Electrical Schematic - Charging Circuit Electric Start S/N: 2017711286 to 2017954955

Note: Unless noted otherwise, use the standard torque specifications

Mfg. No: 5901498

5416152 / MAIN WIRE HARNESS - KAWASAKI FS600V ENGINES

5416152

(If internal schematic of the switch is not shown, the image of the switch represents the back view of the connector as it is connected to the switch.)
*This switch uses a "shorting" connector. When the connector is unplugged, the terminals going to the identified pole will have continuity.

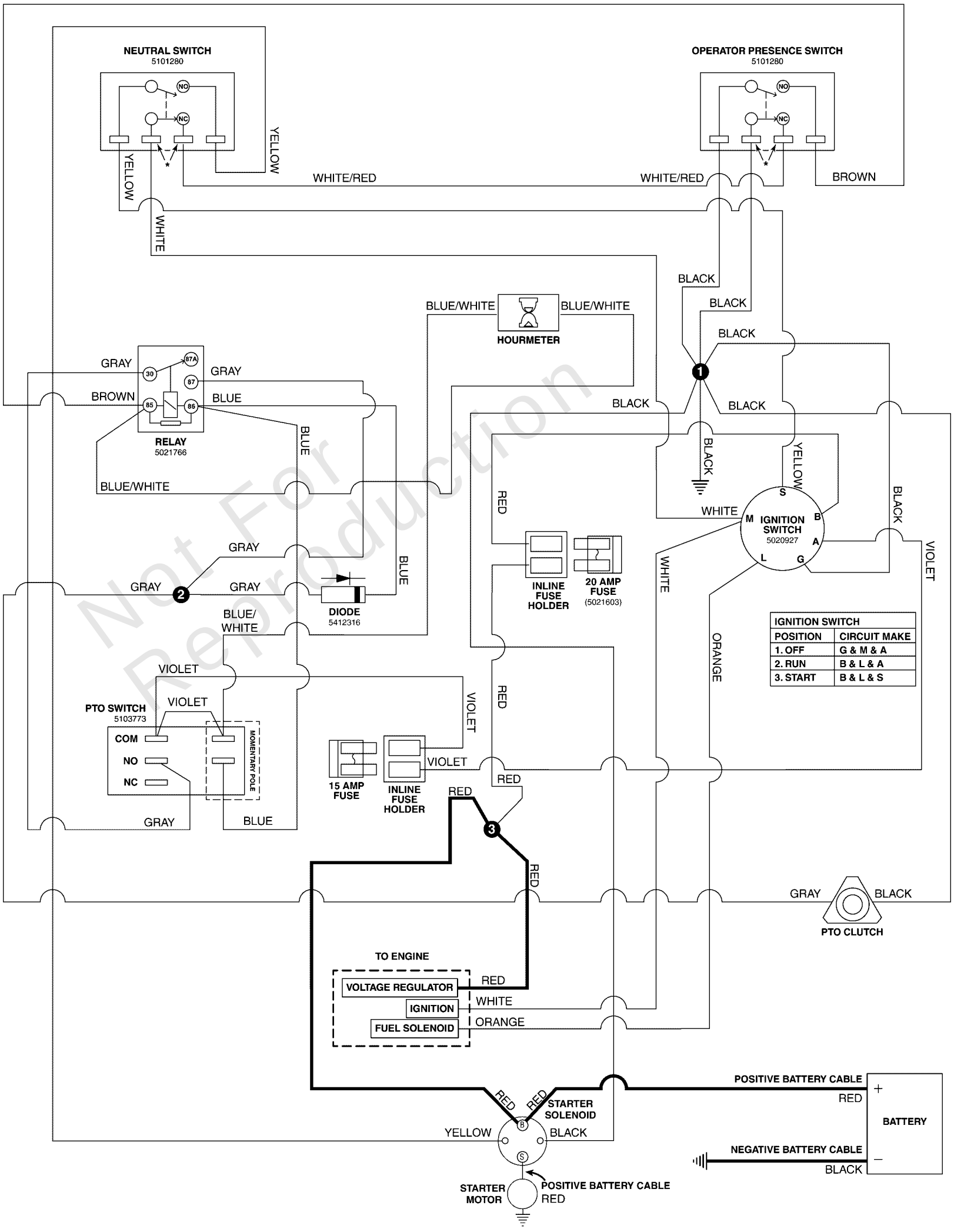

Not For Reproduction

Copyright © Briggs & Stratton. All Rights reserved

Electrical Schematic - Charging Circuit Electric Start S/N: 2017711286 to 2017954955

REF NO	PART NO	QTY	DESCRIPTION

Not For Reproduction

Copyright © Briggs & Stratton. All Rights reserved

Electrical Schematic - Charging Circuit Electric Start S/N: 2017954956 & Above

Note: Unless noted otherwise, use the standard torque specifications

Mfg. No: 5901498

5105538 / MAIN WIRE HARNESS - KAWASAKI FS600V ENGINES

5105538C

(If internal schematic of the switch is not shown, the image of the switch represents the back view of the connector as it is connected to the switch.)
*This switch uses a "shorting" connector. When the connector is unplugged, the terminals going to the identified pole will have continuity.

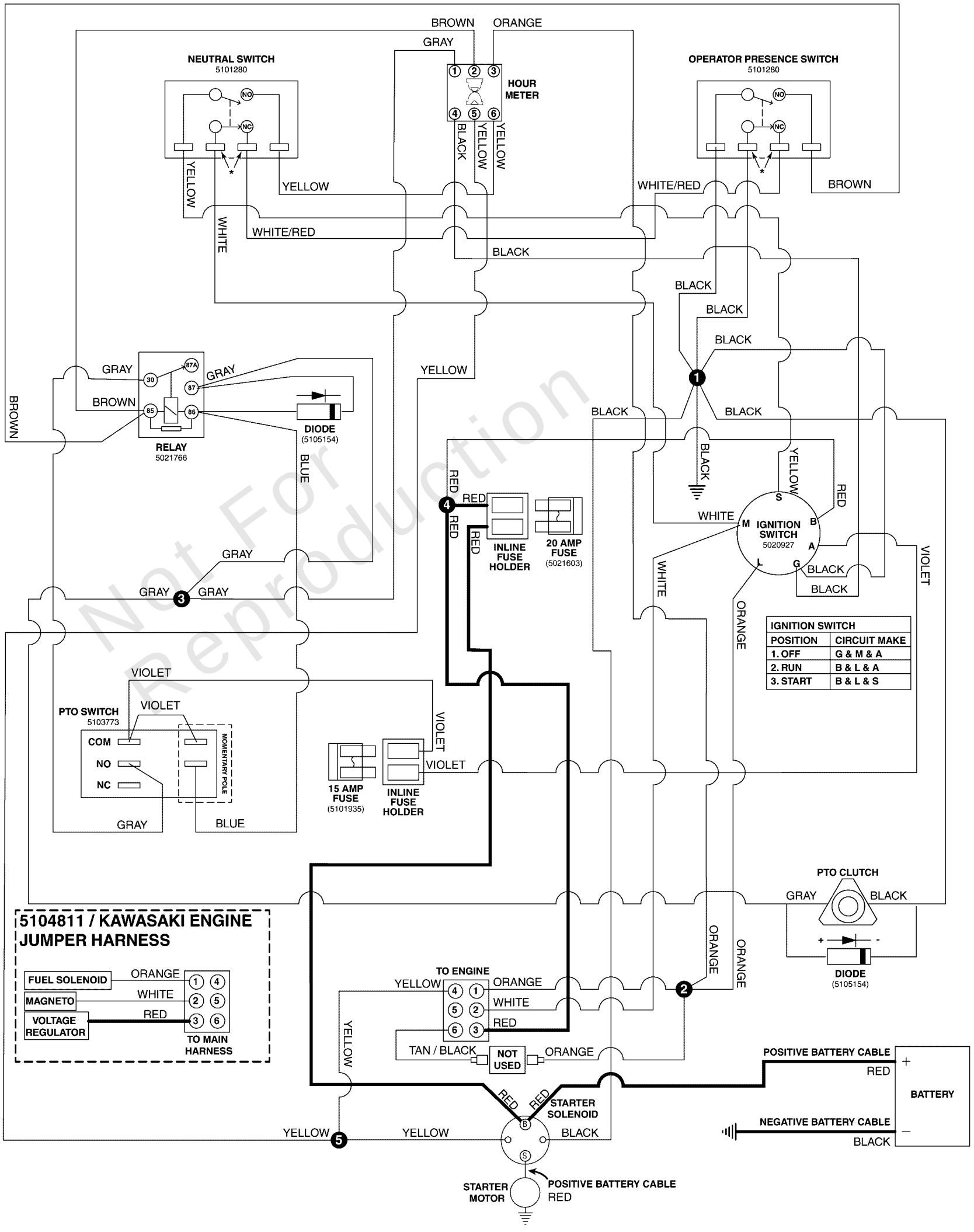

Not For Reproduction

Copyright © Briggs & Stratton. All Rights reserved

Electrical Schematic - Charging Circuit Electric Start S/N: 2017954956 & Above

REF NO	PART NO	QTY	DESCRIPTION
5105538	5105538	1	HARNESS, WALK BEHIND, WIRING
5104811	5104811	1	WIRE HARNESS, JUMPER, KAWI

Not For Reproduction

Copyright © Briggs & Stratton. All Rights reserved

Electrical Schematic - Cranking Circuit Electric Start S/N: 2017711285 & Below

Note: Unless noted otherwise, use the standard torque specifications

Mfg. No: 5901498

Main Wire Harness (Electric Start)

5412954

*This switch uses a “shorting” connector. When the connector is unplugged, the terminals going to the identified pole will have continuity.

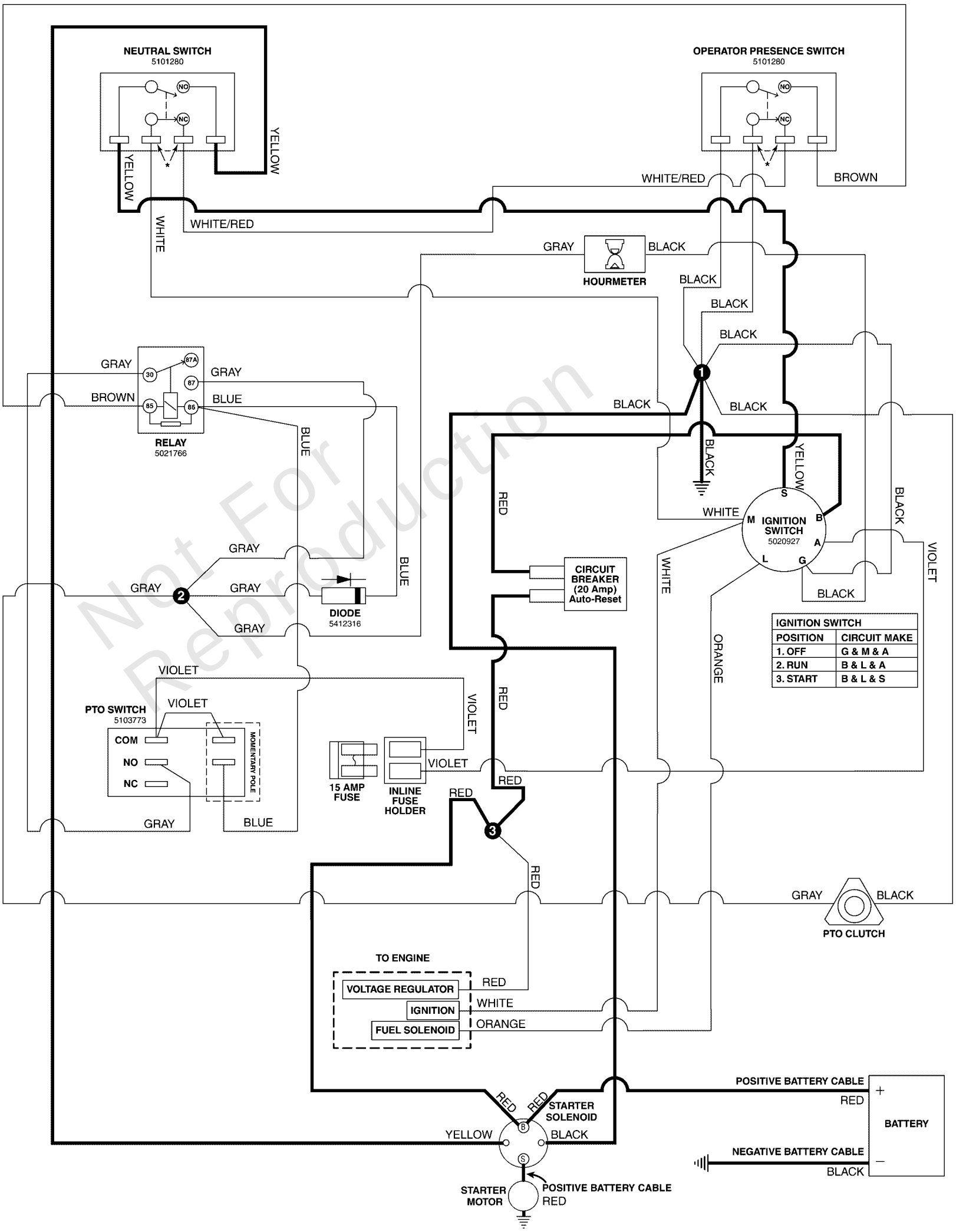

Not For Reproduction

Copyright © Briggs & Stratton. All Rights reserved

Electrical Schematic - Cranking Circuit Electric Start S/N: 2017711285 & Below

REF NO	PART NO	QTY	DESCRIPTION
5412954	5412954	1	WIRE HARNESS, KAWI ELEC START, SW25

Not For Reproduction

Copyright © Briggs & Stratton. All Rights reserved

Electrical Schematic - Cranking Circuit Electric Start S/N: 2017711286 to 2017954955

Note: Unless noted otherwise, use the standard torque specifications

Mfg. No: 5901498

5416152 / MAIN WIRE HARNESS - KAWASAKI FS600V ENGINES

5416152

(If internal schematic of the switch is not shown, the image of the switch represents the back view of the connector as it is connected to the switch.)
*This switch uses a "shorting" connector. When the connector is unplugged, the terminals going to the identified pole will have continuity.

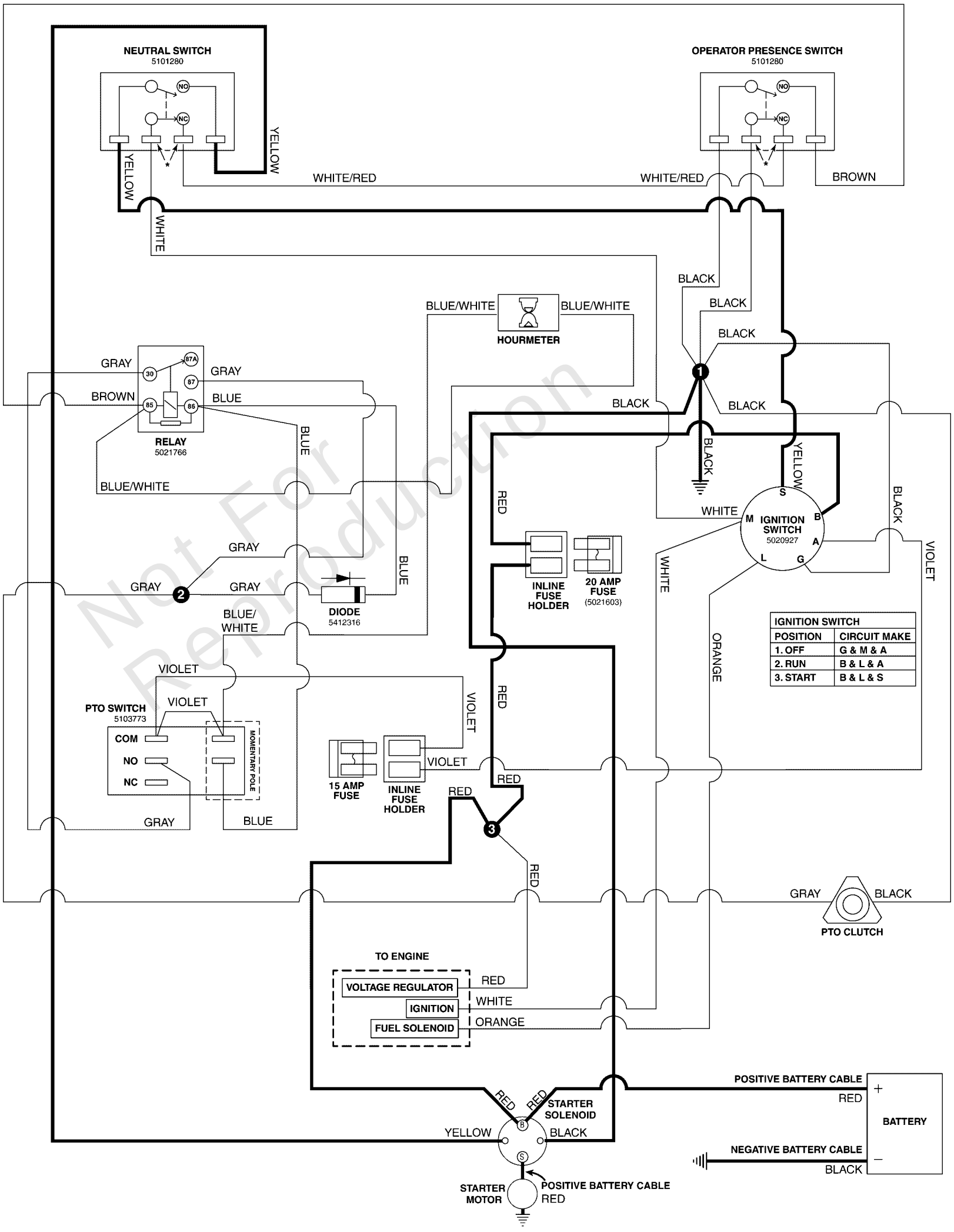

Not For Reproduction

Copyright © Briggs & Stratton. All Rights reserved

Electrical Schematic - Cranking Circuit Electric Start S/N: 2017711286 to 2017954955

REF NO	PART NO	QTY	DESCRIPTION

Not For Reproduction

Copyright © Briggs & Stratton. All Rights reserved

Electrical Schematic - Cranking Circuit Electric Start S/N: 2017954956 & Above

Note: Unless noted otherwise, use the standard torque specifications

Mfg. No: 5901498

5105538 / MAIN WIRE HARNESS - KAWASAKI FS600V ENGINES

5105538C

(If internal schematic of the switch is not shown, the image of the switch represents the back view of the connector as it is connected to the switch.)
*This switch uses a "shorting" connector. When the connector is unplugged, the terminals going to the identified pole will have continuity.

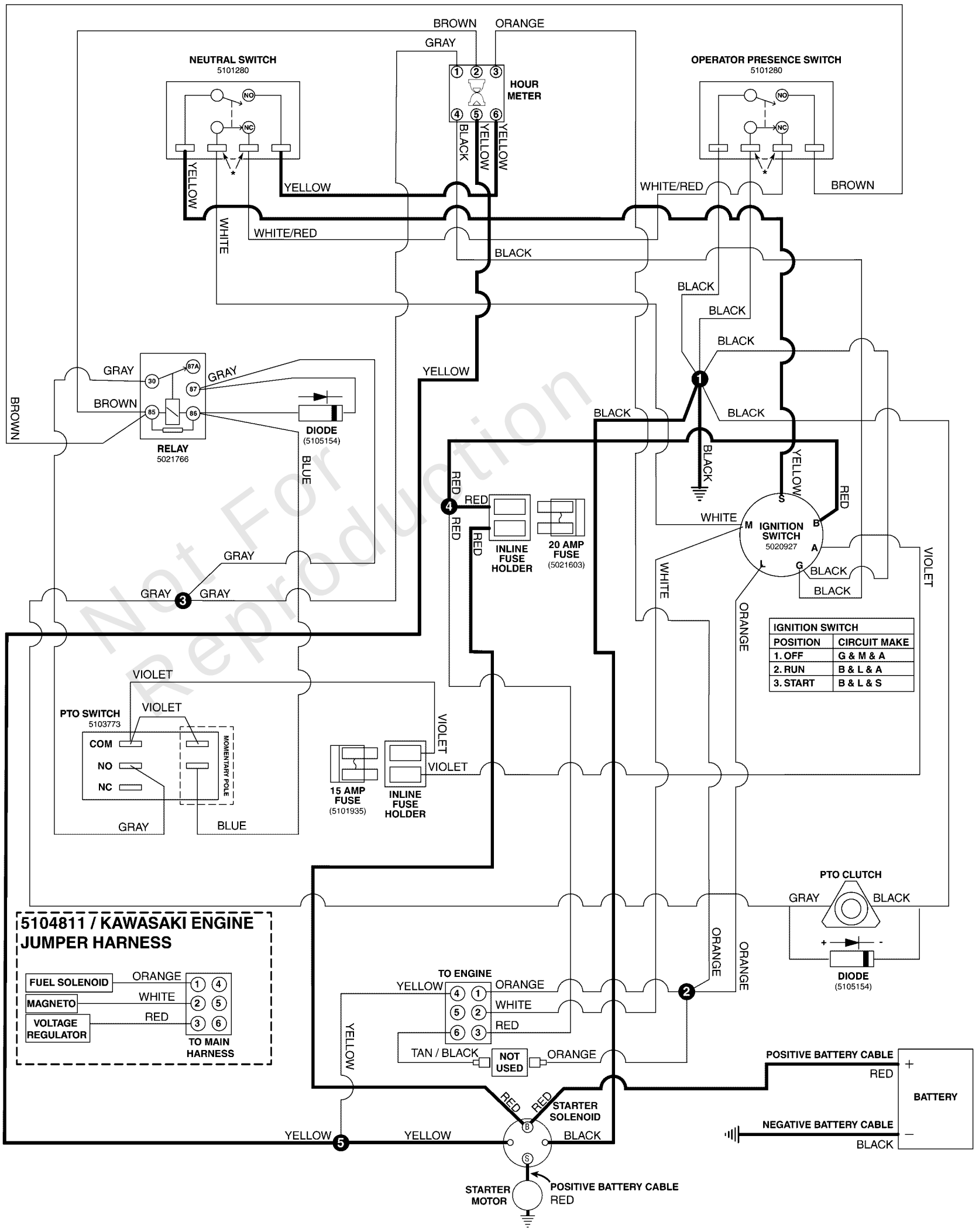

Not For Reproduction

Copyright © Briggs & Stratton. All Rights reserved

Electrical Schematic - Cranking Circuit Electric Start S/N: 2017954956 & Above

REF NO	PART NO	QTY	DESCRIPTION
5105538	5105538	1	HARNESS, WALK BEHIND, WIRING
5104811	5104811	1	WIRE HARNESS, JUMPER, KAWI

Not For Reproduction

Copyright © Briggs & Stratton. All Rights reserved

Electrical Schematic - Engine Op. Pres. Circuit Electric Start S/N: 2017711285 & Below

Note: Unless noted otherwise, use the standard torque specifications

Mfg. No: 5901498

Main Wire Harness (Electric Start)

5412954

*This switch uses a “shorting” connector. When the connector is unplugged, the terminals going to the identified pole will have continuity.

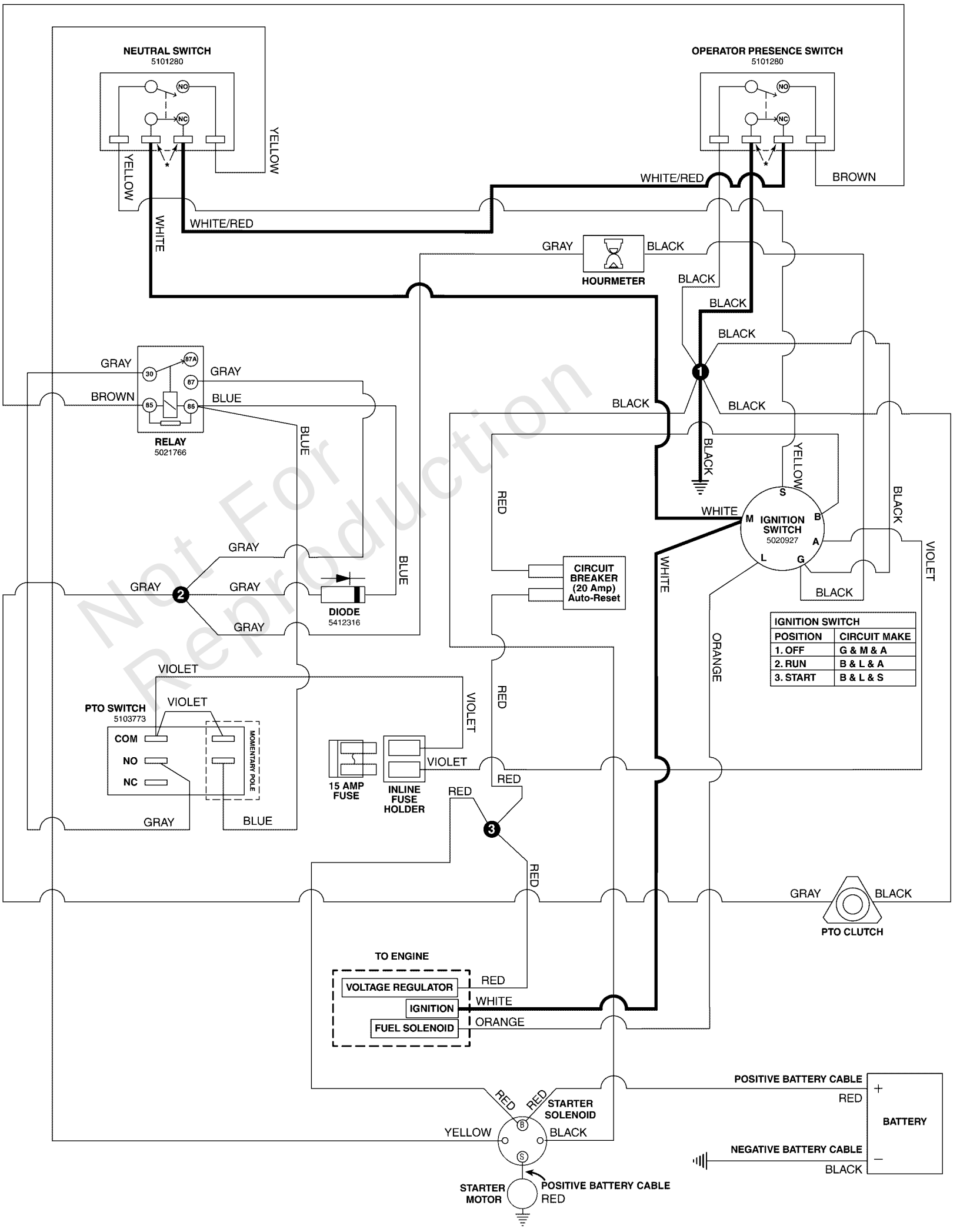

Not For Reproduction

Copyright © Briggs & Stratton. All Rights reserved

Electrical Schematic - Engine Op. Pres. Circuit Electric Start S/N: 2017711285 & Below

REF NO	PART NO	QTY	DESCRIPTION
5412954	5412954	1	WIRE HARNESS, KAWI ELEC START, SW25

Not For Reproduction

Copyright © Briggs & Stratton. All Rights reserved

Note: Unless noted otherwise, use the standard torque specifications

Mfg. No: 5901498

5416152 / MAIN WIRE HARNESS - KAWASAKI FS600V ENGINES

5416152

(If internal schematic of the switch is not shown, the image of the switch represents the back view of the connector as it is connected to the switch.)
*This switch uses a "shorting" connector. When the connector is unplugged, the terminals going to the identified pole will have continuity.

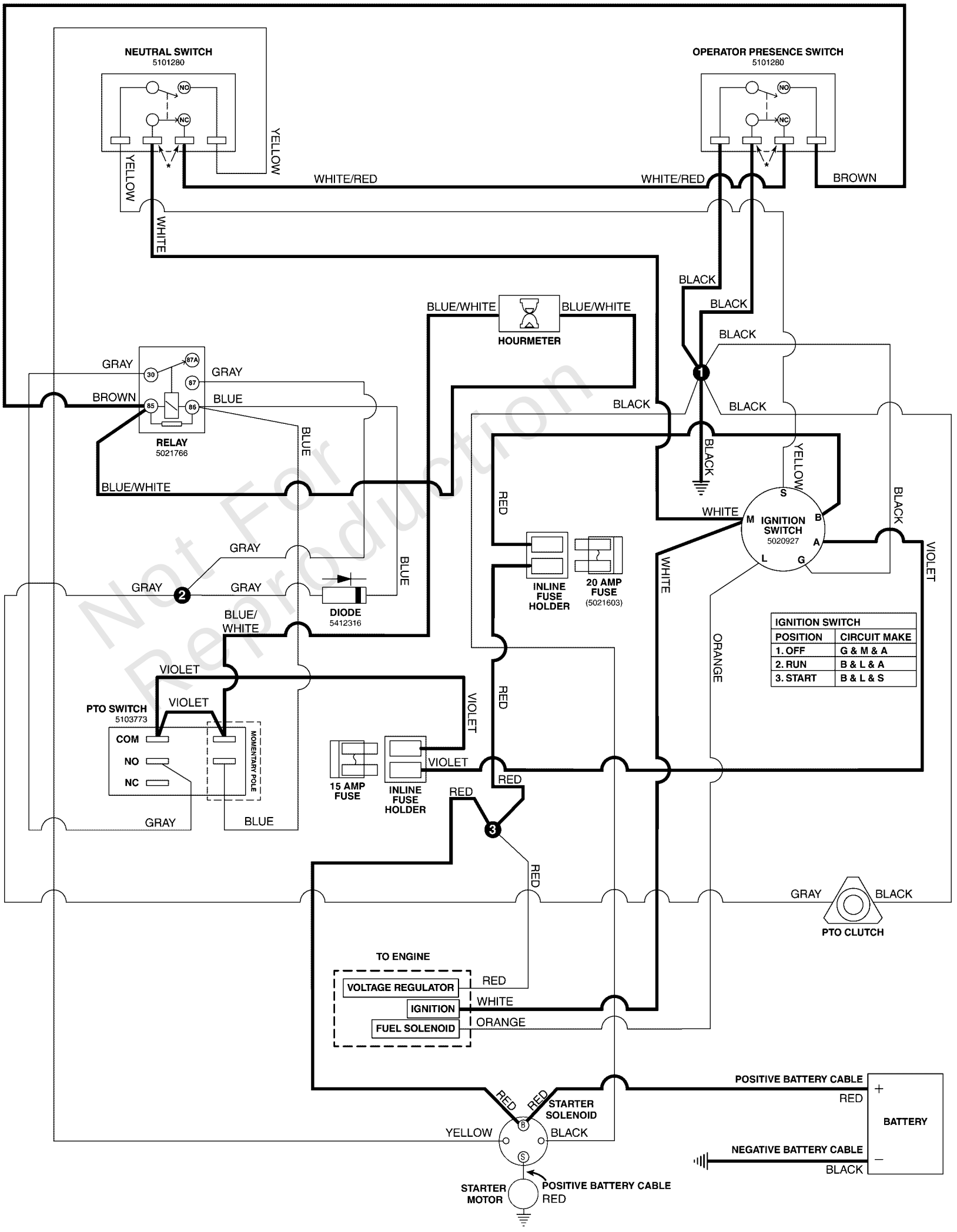

Not For Reproduction

Copyright © Briggs & Stratton. All Rights reserved

REF NO	PART NO	QTY	DESCRIPTION

Not For Reproduction

Copyright © Briggs & Stratton. All Rights reserved

Note: Unless noted otherwise, use the standard torque specifications

Mfg. No: 5901498

5105538 / MAIN WIRE HARNESS - KAWASAKI FS600V ENGINES

5105538C

(If internal schematic of the switch is not shown, the image of the switch represents the back view of the connector as it is connected to the switch.)
*This switch uses a "shorting" connector. When the connector is unplugged, the terminals going to the identified pole will have continuity.

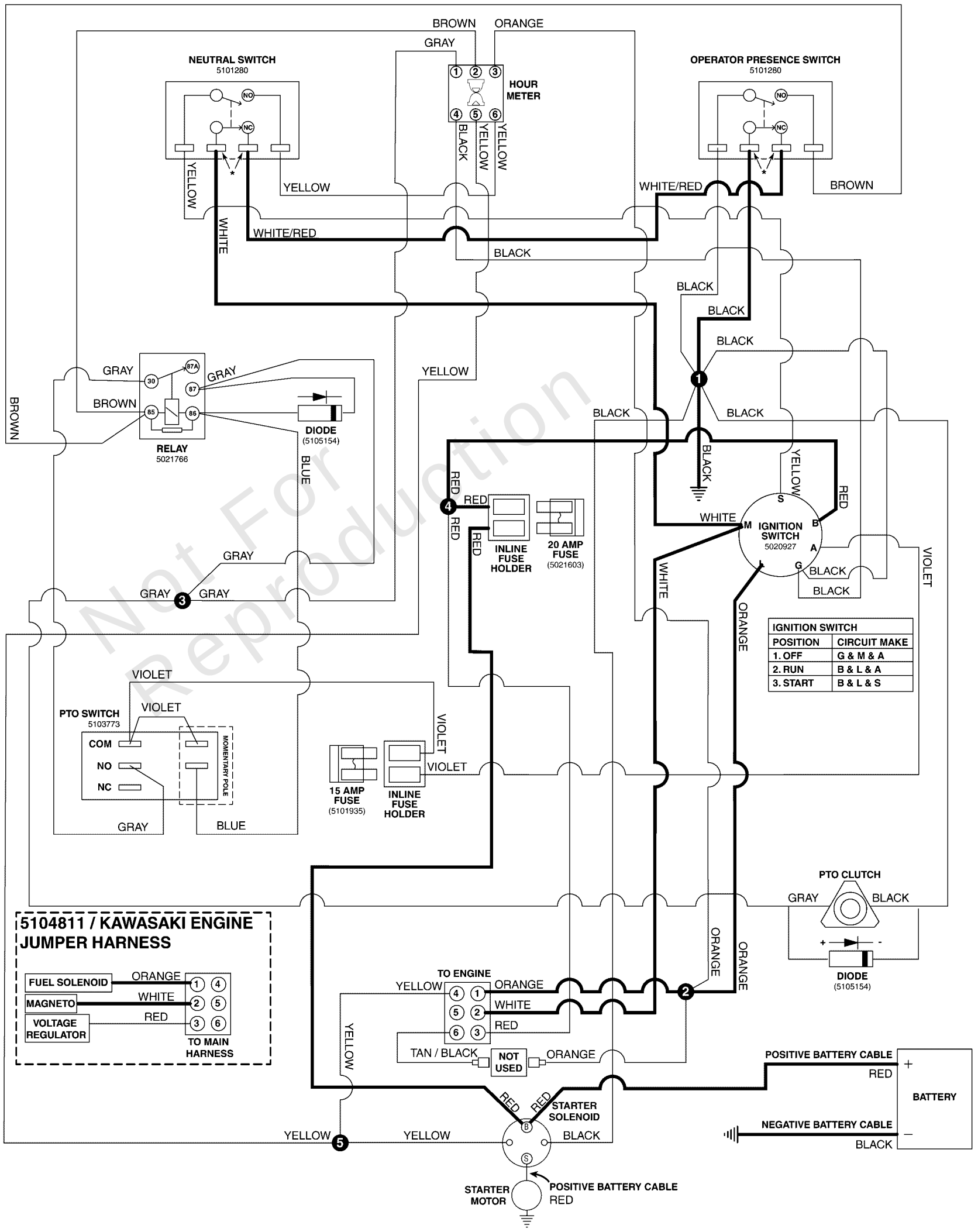

Not For Reproduction

Copyright © Briggs & Stratton. All Rights reserved

Electrical Schematic - Engine Op. Pres. Circuit Electric Start S/N: 2017954956 & Above

REF NO	PART NO	QTY	DESCRIPTION
5105538	5105538	1	HARNESS, WALK BEHIND, WIRING
5104811	5104811	1	WIRE HARNESS, JUMPER, KAWI

Not For Reproduction

Copyright © Briggs & Stratton. All Rights reserved

Electrical Schematic - PTO Op. Pres. Circuit Electric Start S/N: 2017711285 & Below

Note: Unless noted otherwise, use the standard torque specifications

Mfg. No: 5901498

Main Wire Harness (Electric Start)

5412954

*This switch uses a “shorting” connector. When the connector is unplugged, the terminals going to the identified pole will have continuity.

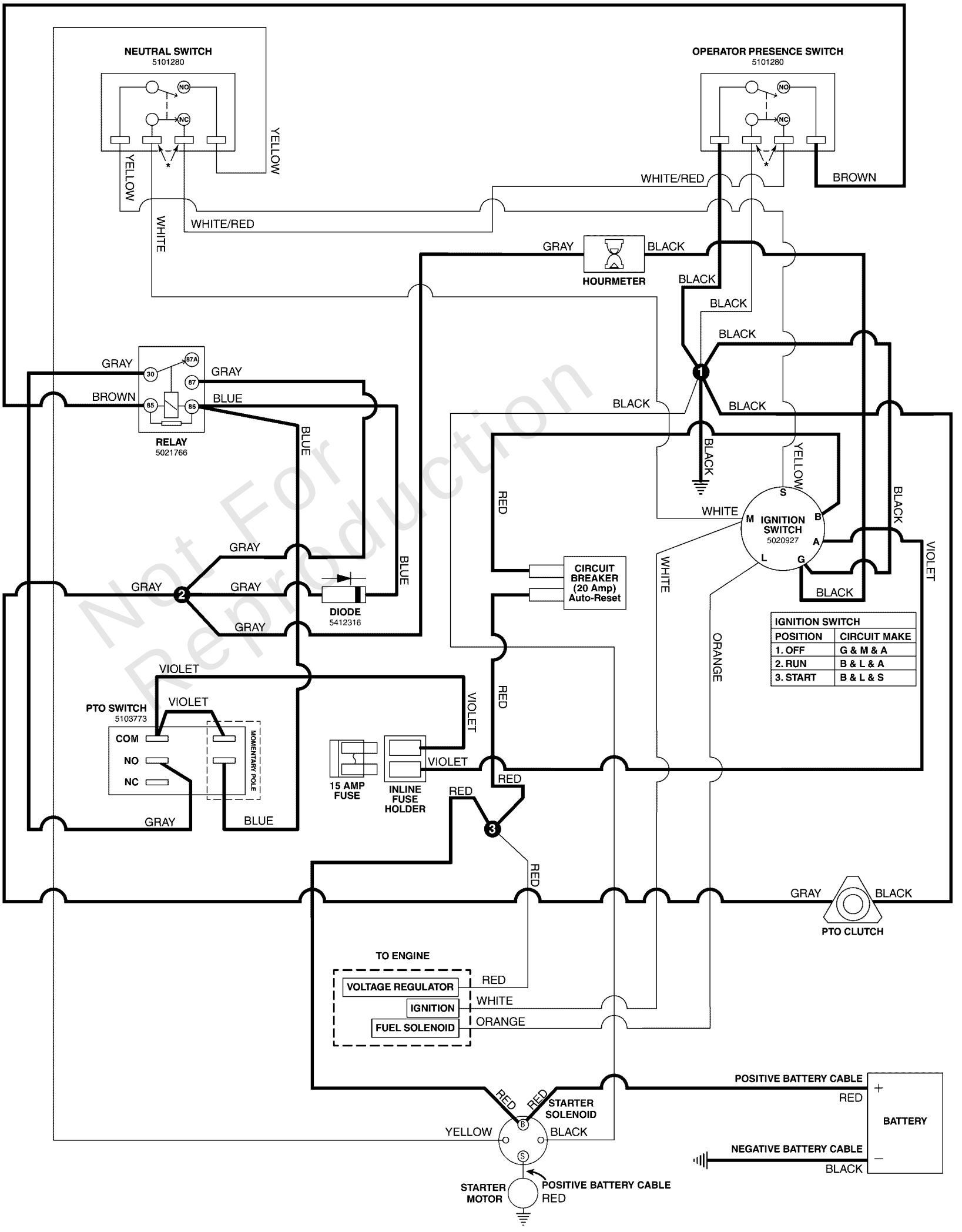

Not For Reproduction

Copyright © Briggs & Stratton. All Rights reserved

Electrical Schematic - PTO Op. Pres. Circuit Electric Start S/N: 2017711285 & Below

REF NO	PART NO	QTY	DESCRIPTION
5412954	5412954	1	WIRE HARNESS, KAWI ELEC START, SW25

Not For Reproduction

Copyright © Briggs & Stratton. All Rights reserved

Electrical Schematic - PTO Op. Pres. Circuit Electric Start S/N: 2017711286 to

Note: Unless noted otherwise, use the standard torque specifications

Mfg. No: 5901498

5416152 / MAIN WIRE HARNESS - KAWASAKI FS600V ENGINES

5416152

(If internal schematic of the switch is not shown, the image of the switch represents the back view of the connector as it is connected to the switch.)
*This switch uses a "shorting" connector. When the connector is unplugged, the terminals going to the identified pole will have continuity.

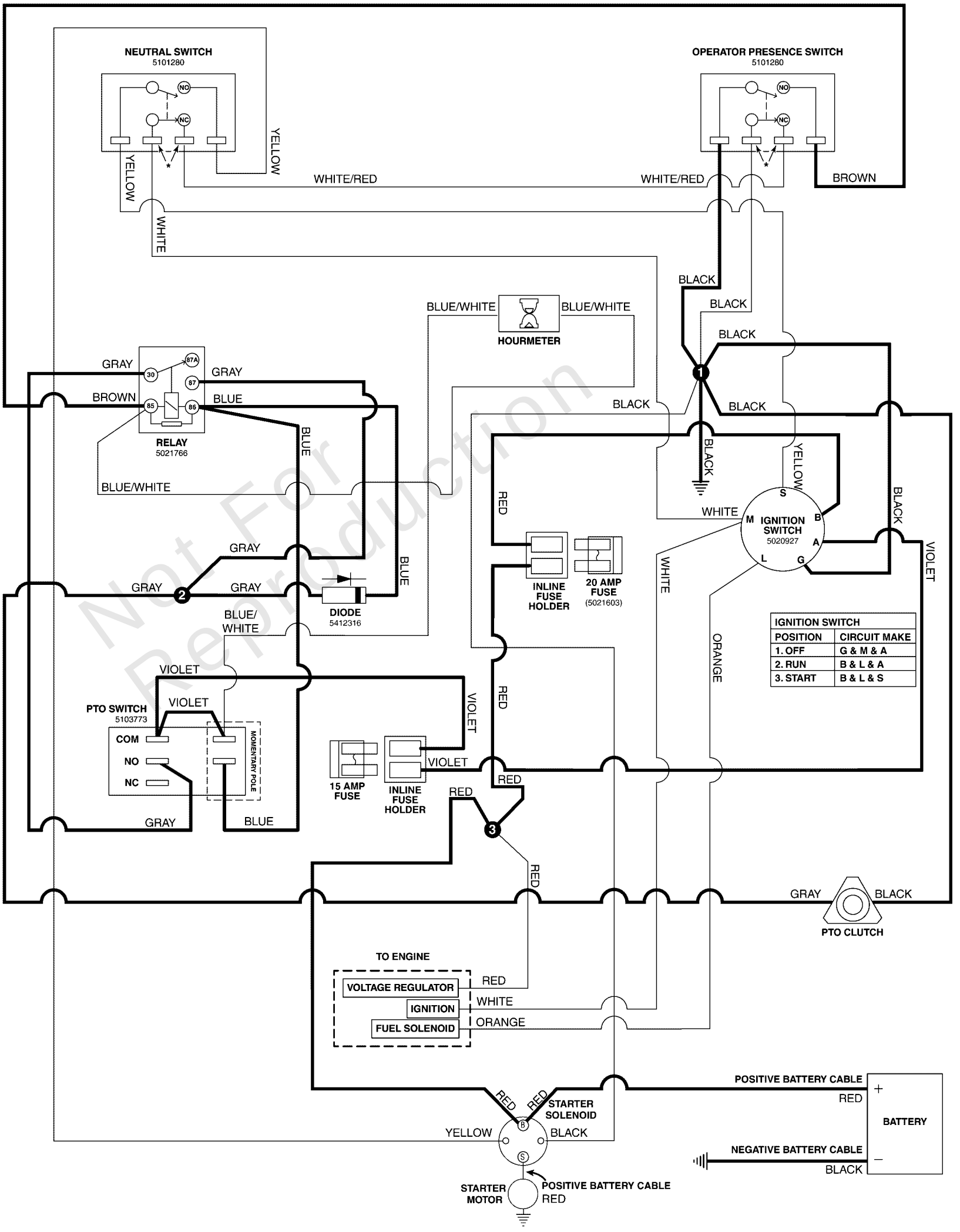

Not For Reproduction

Copyright © Briggs & Stratton. All Rights reserved

Electrical Schematic - PTO Op. Pres. Circuit Electric Start S/N: 2017711286 to

REF NO	PART NO	QTY	DESCRIPTION

Not For Reproduction

Copyright © Briggs & Stratton. All Rights reserved

Electrical Schematic - PTO Op. Pres. Circuit Electric Start S/N: 2017954956 & Above

Note: Unless noted otherwise, use the standard torque specifications

Mfg. No: 5901498

5105538 / MAIN WIRE HARNESS - KAWASAKI FS600V ENGINES

5105538C

(If internal schematic of the switch is not shown, the image of the switch represents the back view of the connector as it is connected to the switch.)
*This switch uses a "shorting" connector. When the connector is unplugged, the terminals going to the identified pole will have continuity.

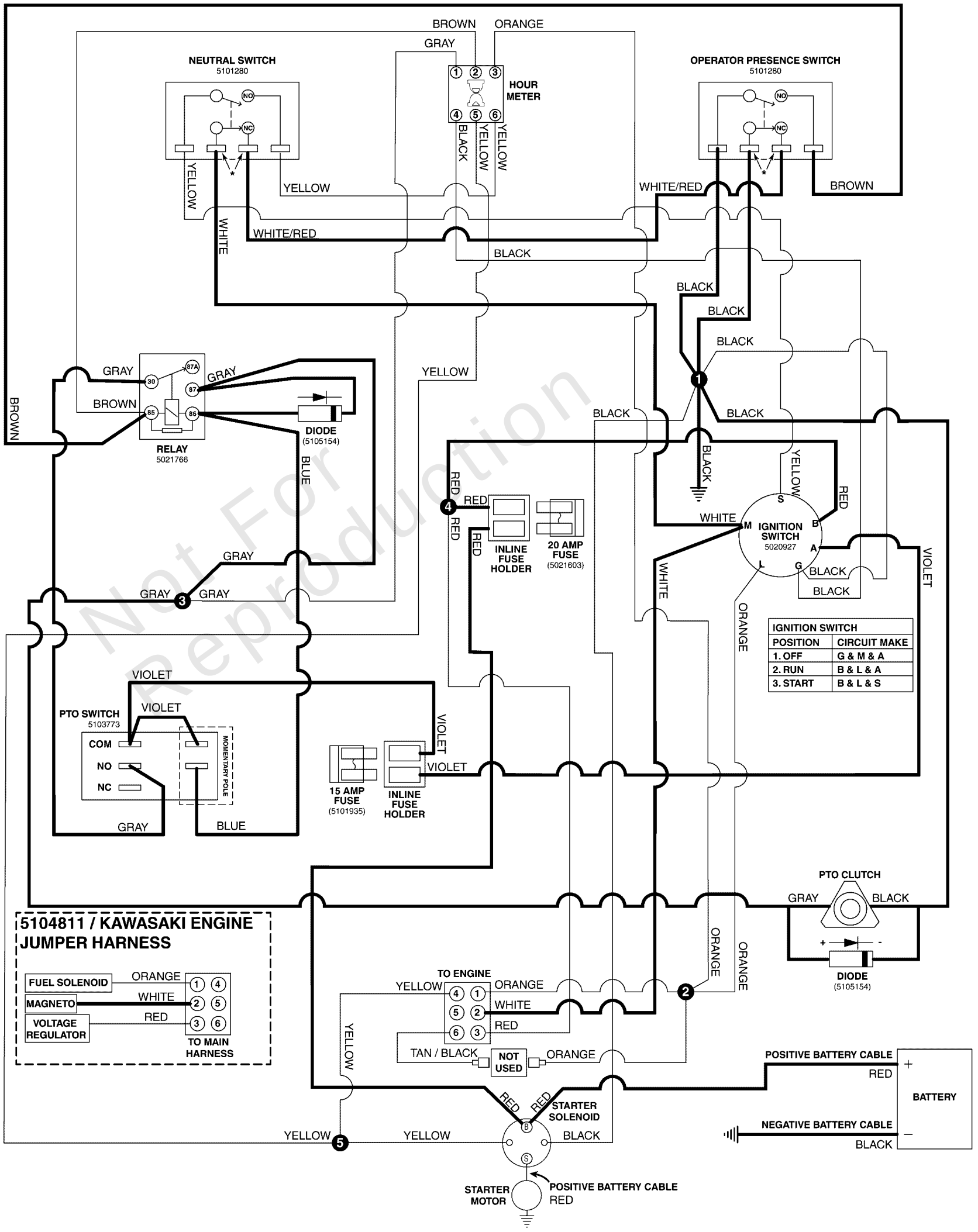

Not For Reproduction

Copyright © Briggs & Stratton. All Rights reserved

Electrical Schematic - PTO Op. Pres. Circuit Electric Start S/N: 2017954956 & Above

REF NO	PART NO	QTY	DESCRIPTION
5105538	5105538	1	HARNESS, WALK BEHIND, WIRING
5104811	5104811	1	WIRE HARNESS, JUMPER, KAWI

Not For Reproduction

Copyright © Briggs & Stratton. All Rights reserved

Note: Unless noted otherwise, use the standard torque specifications

Mfg. No: 5901498

5303925
5303955

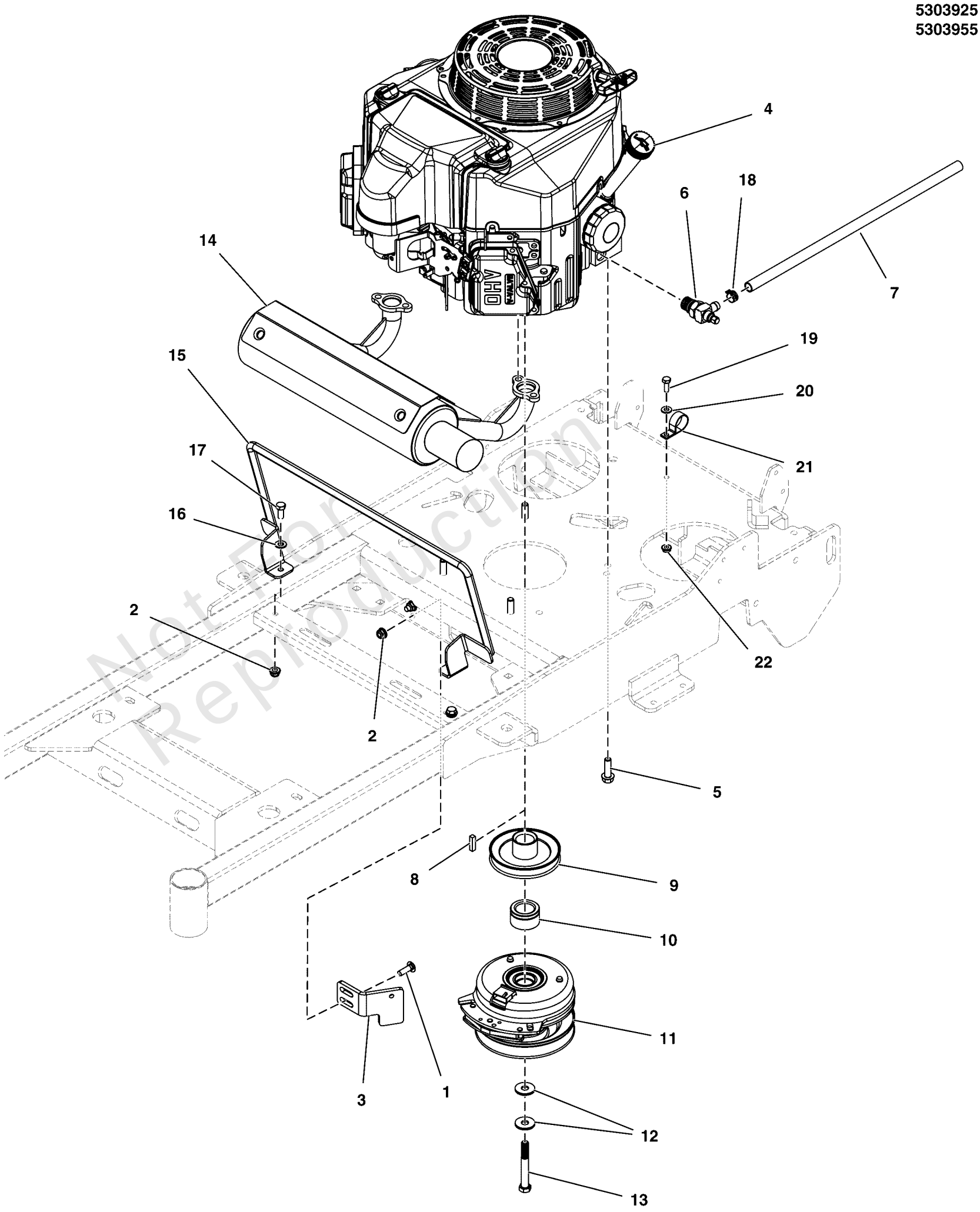

Not For Reproduction

Copyright © Briggs & Stratton. All Rights reserved

Engine & PTO Group

REF NO	PART NO	QTY	DESCRIPTION
1	5025145X8	2	BOLT, 5/16-18 X 1, CARRIAGE
2	5025392	4	NUT, 5/16-18 HEX NYLOCK FLANGE
3	5413242A	1	PLATE, CLUTCH ANCHOR, SW25/FW25 - BLK
4	-----	1	ENGINE 15HP KAW MAN START 1-1/8"X108.8MM
4	-----	1	ENGINE, 18.5HP KAWASAKI, FS600V, ELEC ST
5	5025532	4	BOLT, 3/8-16 X 1-1/4, SF, PLT W/PATCH
6	5104567	1	VALVE, OIL DRAIN, 90 DEG. M20 X 2.5 THD
7	5104570X18	1	TUBING,CLEAR PVC,1/2"IDX5/8"OD X 18"LG
8	5050407X8	1	KEY, 1/4 SQ X 1
9	5104236	1	PULLEY, CRANKSHAFT, 1.125ID X 4.50OD, OS
10	5103892	1	SPACER, 1.13 X 1.75 X .75, CZ
11	5104440	1	CLUTCH, WARNER, 105 ft lbs - 1.13"
12	5025585	2	BELLEVILLE WASHER 1.1875 X .442 X .089
13	5102865	1	BOLT, CRANKSHAFT,7/16-20X2-3/4, GD8
14	5104539	1	MUFFLER, 15-19HP KAWI, WALKS
15	5413678A	1	WELD, GUARD, MUFFLER, W25 - BLK -(USA Models Only)
16	5025155	2	WASHER, 5/16" SAE
17	5025011X6	2	BOLT, 5/16-18 X 3/4 GD5
18	5023268	1	CLAMP, HOSE
19	5025010X6	1	BOLT, 1/4-20 X 3/4 GD5 CZ
20	5025154	1	WASHER, 1/4 SAE
21	5021500	1	CLAMP, VINYL INSULATED
22	5025126	1	NUT, 1/4-20 HEX SERR. FLANGE

Not For Reproduction

Copyright © Briggs & Stratton. All Rights reserved

0001KAWIFS

Fits Kawasaki Engine Models Numbers:

FS481V
FS541V
FS600V
FS651V
FS691V
FS730V

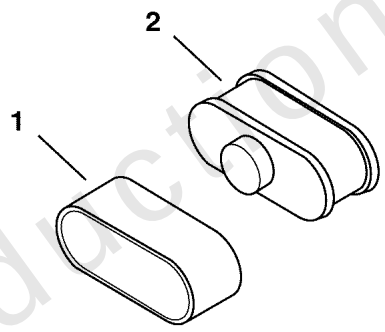

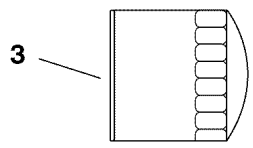

Not For Reproduction

Copyright © Briggs & Stratton. All Rights reserved

REF NO	PART NO	QTY	DESCRIPTION
1	5102278X2	1	FILTER,AIR,OUTER,KAWA FS481V THRU FS730V (11013-7046) -(SV)
2	5102278X3	1	FILTER,AIR,INNER,KAWA FS481V THRU FS730V (11013-7049) -(SV)
3	5102278X1	1	FILTER,OIL,KAWA FS,FX,FR 603 & 726CC ENG (49065-7007) -(SV)

Not For Reproduction

Copyright © Briggs & Stratton. All Rights reserved

Fuel Tank & Mount, Fuel Supply, and EVAP Group (No Canister)

Note: Unless noted otherwise, use the standard torque specifications

Mfg. No: 5901498

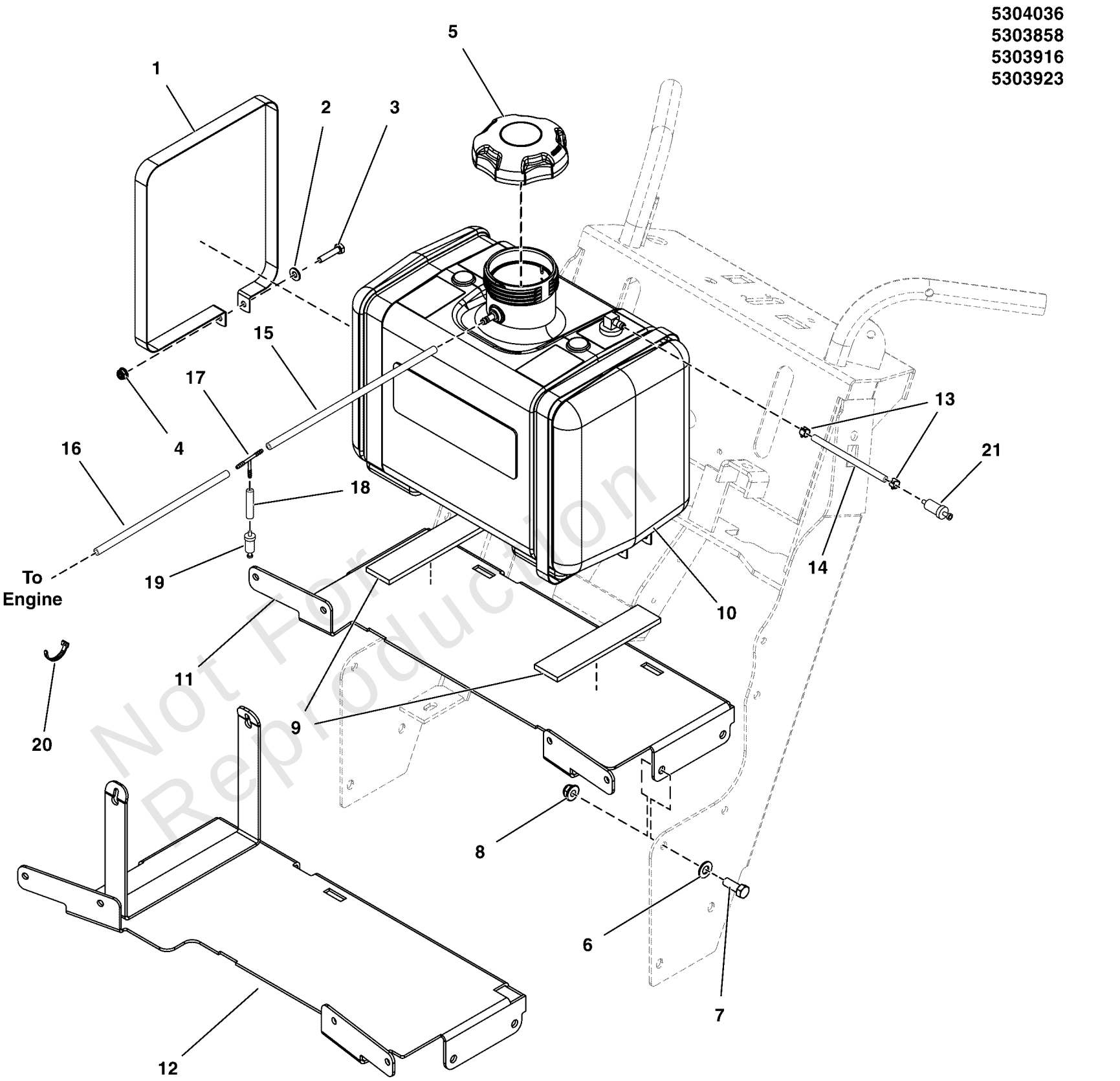

Not For Reproduction

Copyright © Briggs & Stratton. All Rights reserved

Fuel Tank & Mount, Fuel Supply, and EVAP Group (No Canister)

REF NO	PART NO	QTY	DESCRIPTION
1	5403445A	2	STRAP, FUEL TANK
2	5025154	2	WASHER, 1/4 SAE
3	5025010X8	2	BOLT, 1/4-20 X 1" GD5 CZ
4	5025391	2	NUT, 1/4-20 HEX NYLOCK FLANGE
5	5103005	1	FUEL CAP, 3-1/2", MANAGED VENT OUT, 12"
6	5025156	4	WASHER, 3/8 SAE
7	5025013X8	4	BOLT, 3/8-16 X 1" GD5 CZ
8	5025394	4	NUT, 3/8-16 HEX NYLOCK FLANGE
9	5100810	2	PAD, RUBBER MOUNT
10	5102833	1	TANK, 4.625 GAL, W DROP TUBE/VENT
11	5412698A	1	PLATE, TANK MOUNT, SW25 MANUAL - BLK -(Manual Start Models)
12	5413733AA	1	WELD, FUEL TANK MOUNT, W25CE - BLACK -(Electric Start Models)
13	93807	2	CLAMP, HOSE, EXTERNAL, 1/2 - RED
14	5050831X12	1	HOSE, 1/4" FUEL, 12.00"
15	7700552X21P5	1	HOSE, VAPOR, 5MM ID, 21.50 LG
16	7700552X12	1	HOSE, VAPOR, 5MM ID, 12.00 LG
17	5103062	1	FITTING, 3/16" TEE, BARB TYPE, HDPE
18	7700552X3	1	HOSE, VAPOR, 5MM ID, 3.00 LG
19	80025019	1	FILTER, FUEL
20	5021030	2	TIE,SELF-LOCKING, 6"
21	5021178X3	1	FUEL FILTER -(SV)
22	5102833X1	1	GROMMET -(SV)(Grommet for fuel tank 5102833)

Not For Reproduction

Copyright © Briggs & Stratton. All Rights reserved

Handle Bar & Instrument Control Group

Note: Unless noted otherwise, use the standard torque specifications

Mfg. No: 5901498

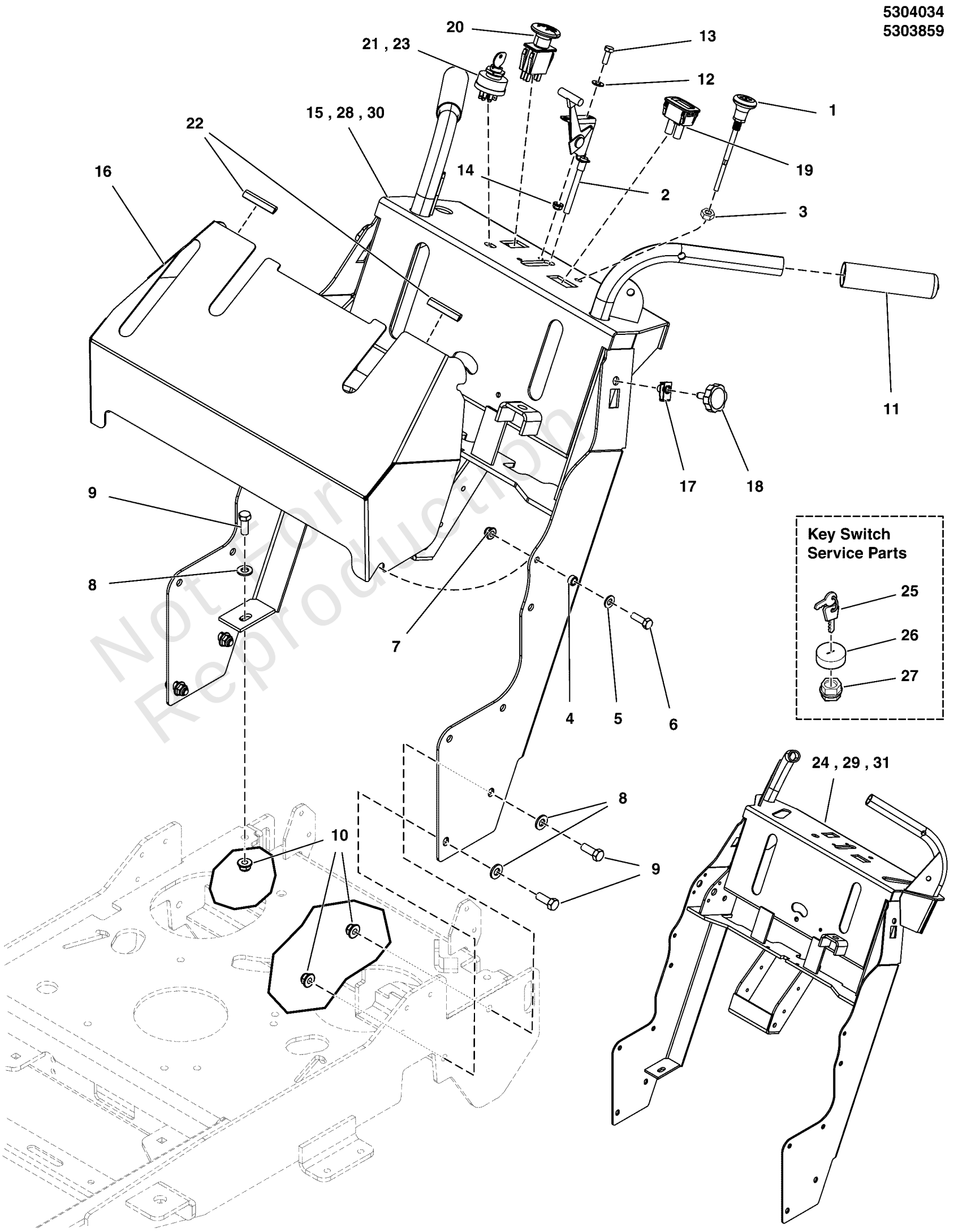

Not for Reproduction

Copyright © Briggs & Stratton. All Rights reserved

Handle Bar & Instrument Control Group

REF NO	PART NO	QTY	DESCRIPTION
1	5047779	1	CABLE, CHOKE CONTROL, 51"
2	5104660	1	CABLE, THROTTLE, 48" DETENTED -(Kawasaki Models)
2	5047629	1	CABLE THROTTLE, 48" -(Briggs & Stratton Models)
3	5025309	1	NUT, HEX 3/8-24
4	5102463	2	SPACER, .33 X .50 X .25, PM, CZ
5	5025155	2	WASHER, 5/16" SAE
6	5025011X8	2	BOLT, 5/16-18 X 1 GD5 CZ
7	5025392	2	NUT, 5/16-18 HEX NYLOCK FLANGE
8	5025293	6	WASHER, 3/8 GD.9 FLAT
9	5025013X8	6	BOLT, 3/8-16 X 1" GD5 CZ
10	5025394	6	NUT, 3/8-16 HEX NYLOCK FLANGE
11	5104659	2	GRIM, FOAM, .940" ID X 4.62" X .187", BLK
12	5025154	2	WASHER, 1/4 SAE
13	5025010X6	2	BOLT, 1/4-20 X 3/4 GD5 CZ
14	5025391	2	NUT, 1/4-20 HEX NYLOCK FLANGE
15	5412590D	1	** WELD, HANDLE BARS, FW25 - RED -(Standard Handle Bars - S/N: 2017118253 & Below)
16	5600848	1	ASSM, HB GUARD W/DECALS, SW25 - DOM -(5413336D)
17	5022308	2	BODY CLIP, 5/16-18-7GA MATERIAL
18	5108141	2	KNOB, 5/16-18 X 1.00, ROSETTE, BLK
19	-----	1	* HOUR METER, ASSEMBLE
20	5104697	1	PTO SWITCH, MOMENTARY, SMALL KNOB
21	5021842	1	SWITCH, IGNITION, 2 POST -(Manual Start)
22	5050853X3	2	BLACK BODY MOLDING, 3" LONG
23	5020927	1	SWITCH, IGNITION, 6 POST -(Electric Start)
24	5412707D	1	** WELD, HANDLE BARS, FW25 CC - RED -(Centralized Control Handle Bars - S/N: 2017118253 & Below)
25	5022789	1	KEY, IGNITION MOLDED SET
26	5022790	1	COVER, PLASTIC, SNAP ON
27	5022791	1	PLASTIC NUT
28	5413922D	1	** WELD, HANDLE BARS, FW25 - RED -(Standard Handle Bars - S/N: 2017118254 - 2017170234)
29	5413923D	1	** WELD, HANDLE BARS, FW25 CC - RED -(Centralized Control Handle Bars - S/N: 2017118254 - 2017170234)
30	5414456B	1	** WELD, HANDLE BARS, W25 - STND - RED -(Standard Handle Bars - S/N: 2017170235 & Above)
31	5414457B	1	** WELD, HANDLE BARS, W25 - CC - RED -(Centralized Control Handle Bars - S/N: 2017170235 & Above)

Not For Reproduction

Footnotes:

* When replacing this hour meter, please call our service department at 1-800-933-6175

** If replacing order all appropiate decals for handle bar.

Copyright © Briggs & Stratton. All Rights reserved

5303862

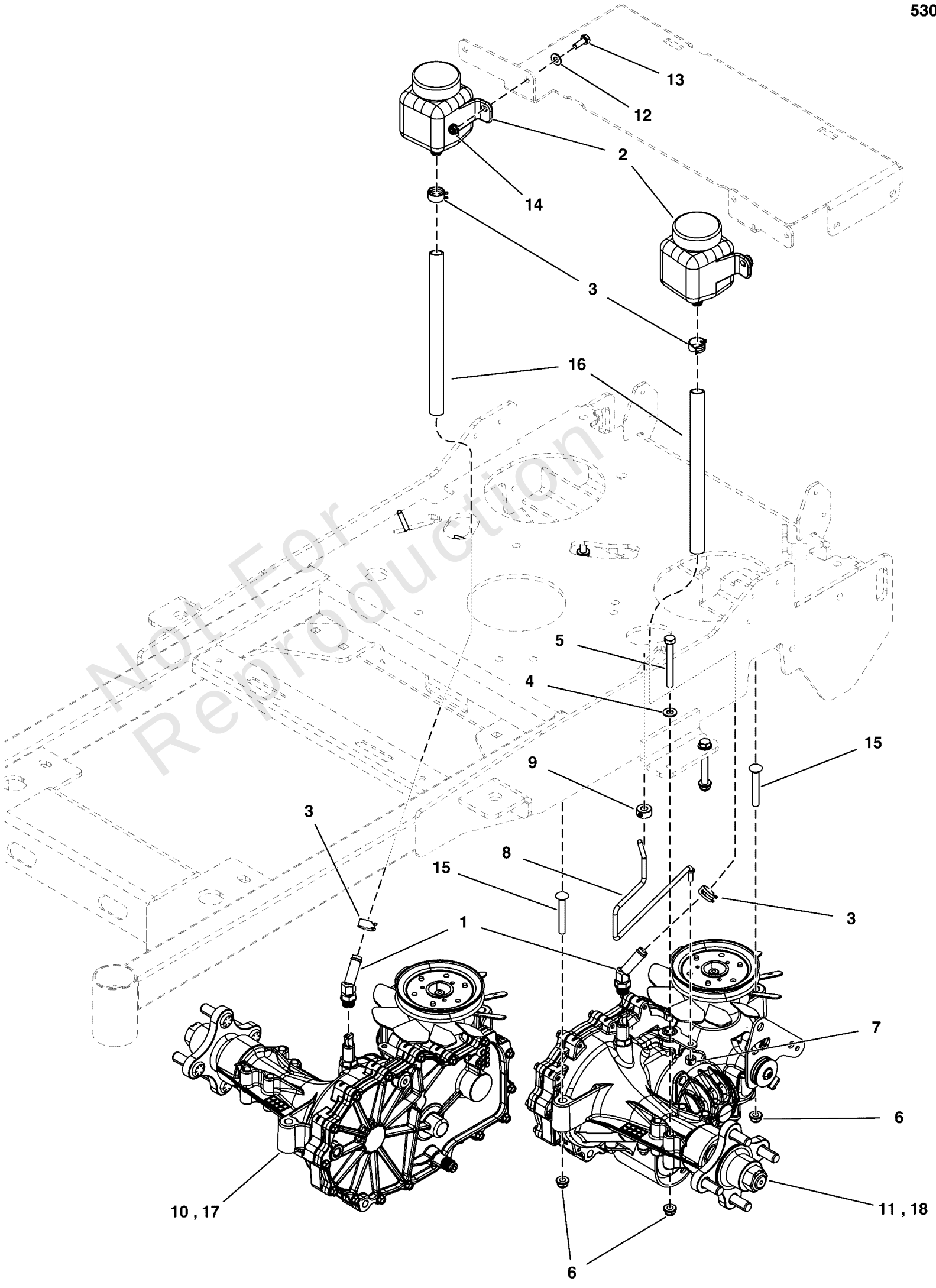

Not For Reproduction

Hydraulic Group

REF NO	PART NO	QTY	DESCRIPTION
1	5102054	2	FITTING, 1/2 HOSE - 9/16 O-RING, 45 ELB
2	5100473	2	HYDRO RES. #71328, 350 ml
3	5025474	4	CLAMP, HOSE, .75 FREE DIA.
4	5025155	4	WASHER, 5/16" SAE
5	5025011X22	4	BOLT, 5/16-18 X 2-3/4 GD5 CZ
6	5025392	8	NUT, 5/16-18 HEX NYLOCK FLANGE
7	5022481	2	COLLAR, 1/4 SET
8	5104532	2	ROD, HYDRO RELEASE, W25
9	5020047	2	COLLAR, 5/16 SET
10	5104472	1	TRANSAXLE, ZT3100, RH, ZJ-KMFE-3L5C-1PLX -(S/N: 2017170234 & Below)
11	5104471	1	TRANSAXLE, ZT3100, LH, ZJ-GMFE-3L5B-1PLX -(S/N: 2017170234 & Below)
12	5025154	4	WASHER, 1/4 SAE
13	5025010X6	4	BOLT, 1/4-20 X 3/4 GD5 CZ
14	5025391	4	NUT, 1/4-20 HEX NYLOCK FLANGE
15	5025145X20	4	BOLT, 5/16-18 X 2-1/2, CARRIAGE, GD5, CZ
16	5050857X7P5	2	HOSE, 1/2" PUSH-ON, 7.50"
17	5106330	1	TRANSAXLE, ZT3100, RH, ZL-KMFE-3L5C-1PXE -(S/N: 2017170235 to 40015467047)
17	5109241	1	TRANSAXLE, ZT-3100, RH,ZL-KMFE-SL5C-1PXX -(S/N: 40015467048 to above)
18	5106331	1	TRANSAXLE, ZT3100, LH, ZL-GMFE-3L5B-1PXE -(S/N: 2017170235 to 40015467047)
18	5109240	1	TRANSAXLE, ZT-3100, LH,ZL-GMFE-SL5B-1PXX -(S/N: 40015467048 to above)

Not For Reproduction

Copyright © Briggs & Stratton. All Rights reserved

Main Frame & Front Caster Group

Note: Unless noted otherwise, use the standard torque specifications

Mfg. No: 5901498

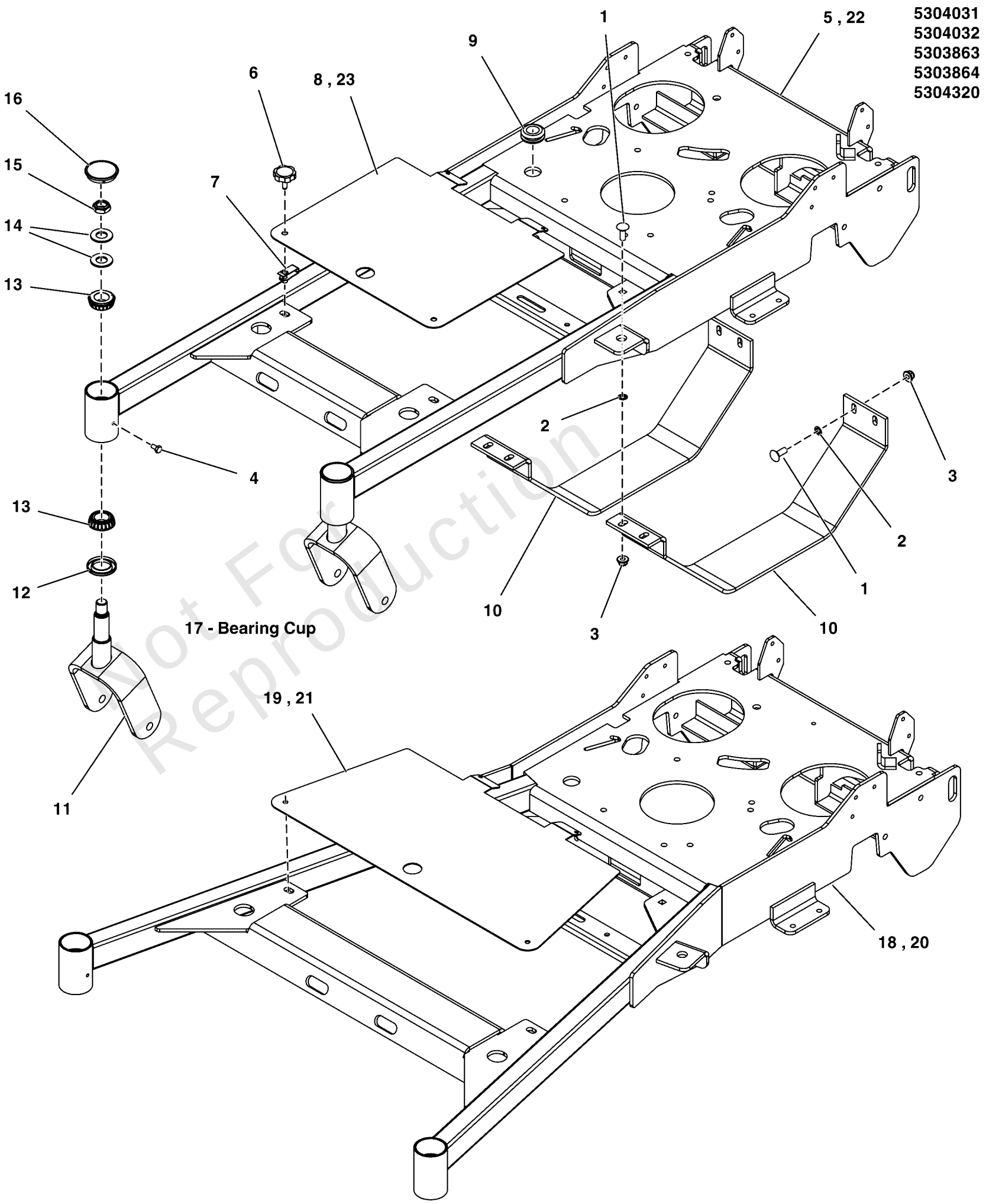

Not For Reproduction

Main Frame & Front Caster Group

REF NO	PART NO	QTY	DESCRIPTION
1	80004497	8	BOLT,3/8-16X1.000,RND HD CRRG,ZINC/CLEAR
2	5025472	8	3/8 PUSHNUT BOLT RETAINER
3	5025394	8	NUT, 3/8-16 HEX NYLOCK FLANGE
4	5025457	2	BOLT, 1/4-28 X 1/2, GD5 CZ
5	5412769D	1	WELD, MAIN FRAME, W25 - 36 - RED -(36" Models - S/N: 2017555756 & Below)
6	5108141	2	KNOB, 5/16-18 X 1.00, ROSETTE, BLK
7	5025452	2	BODY CLIP, 5/16-18 -1/4 MATERIAL
8	5413166D	1	GUARD, WALK, FRONT FRAME, 36 - RED -(36" Models - S/N: 2017555756 & Below)
9	5103944	1	GROMMET, 7/8"ID, 1/4" THICK STK
10	5413033A	2	PLATE, TRANS GUARD SW25 - BLK
11	5407308D	2	WELD, CASTER YOKE, SNP DD - RED
12	5021072	2	SEAL, GREASE
13	5020884	4	BEARING, TAPERED ROLLER, 1
14	5025449	4	WASHER, BELLEVILLE - 1.500 X .755
15	5025448	2	NUT, 3/4-16, HEX JAM NYLON LOCK
16	5109845	2	CAP, GREASE, LOW PROFILE
17	5020884	4	BEARING, CUP -(SV)
18	5412585D	1	WELD, MAIN FRAME, W25 - 48 - RED -(48" Models - S/N: 2017170234 & Below)
19	5413179D	1	PLATE, FRONT FRAME GUARD W25 48 - RED -(48" Models - S/N: 2017170234 & Below)
20	5422130D	1	WELD, MAIN FRAME, W25, 48/52 - RED -(48" Models - S/N: 2017170235 & Above)
21	5414286D	1	PLATE, GUARD, FRONT FRAME, W25 48/52 - RED -(48" Models - S/N: 2017170235 & Above)
22	5422140D	1	WELD, MAIN FRAME, W25, 36 - RED -(36" Models - S/N: 2017555757 & Above)
23	5415716D	1	PLATE, FRAME GUARD, W25 36 - RED -(36" Models - S/N: 2017555757 & Above)

Not For Reproduction

Copyright © Briggs & Stratton. All Rights reserved

Motion Control Group - Lower

Note: Unless noted otherwise, use the standard torque specifications

Mfg. No: 5901498

5304037L
5303865L

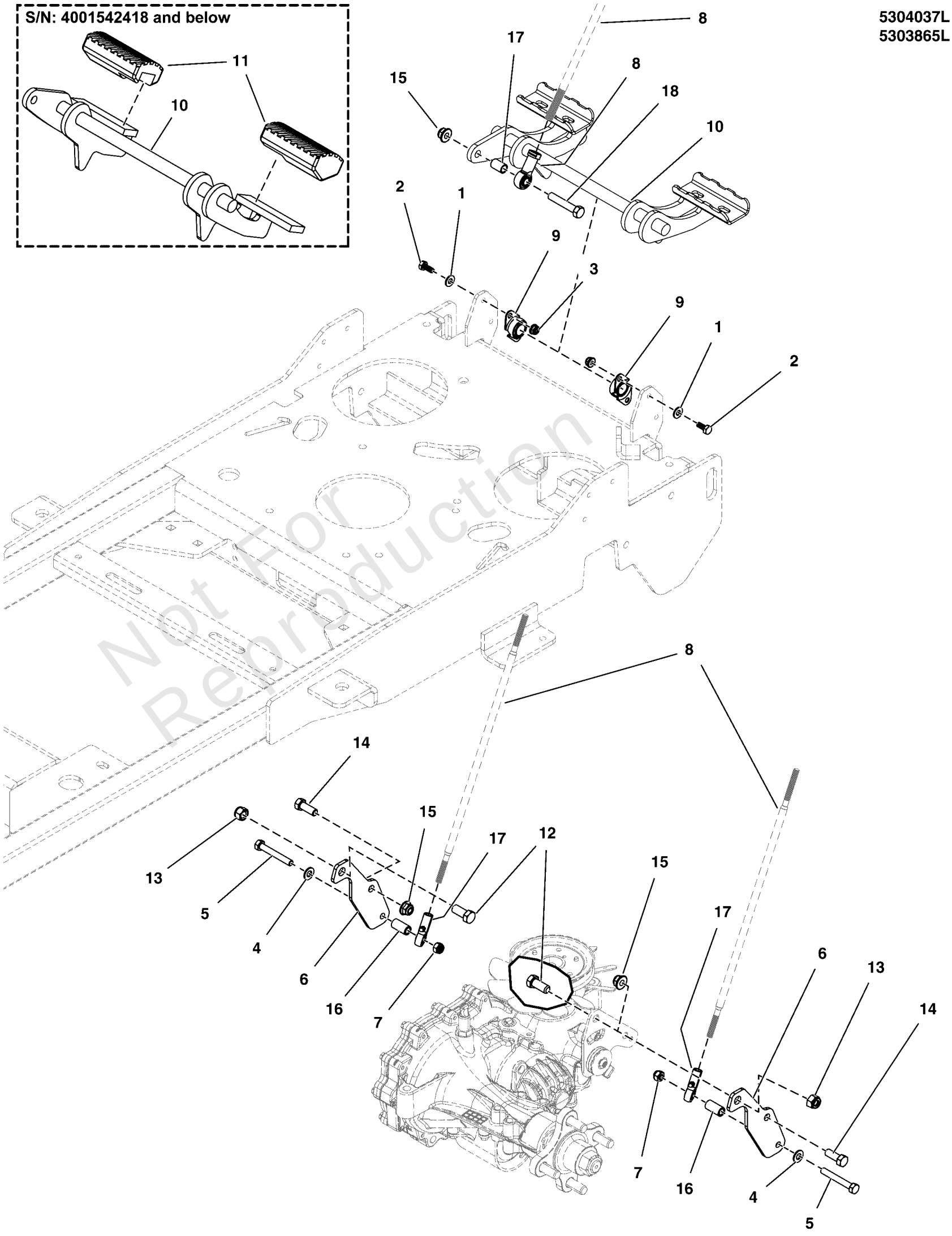

Not For Reproduction

Motion Control Group - Lower

REF NO	PART NO	QTY	DESCRIPTION
1	5025154	4	WASHER, 1/4 SAE
2	-----	4	HHCS, 1/4-20 X 0.625, GR5, ZINC/CLEAR
3	5025391	4	NUT, 1/4-20 Hex Nylock Flange
4	5025155	2	WASHER, 5/16" SAE
5	5025011X18	2	BOLT, 5/16-18 X 2-1/4" GD5 YZ
6	84007883	2	MOUNT
7	5025057	2	NUT, Hex, Nylon Locking, 5/16-18
8	-----	1	SEE MOTION CONTROL UPPER GROUP
9	5104270	2	BEARING, 5/8" FLANGED, PLASTIC BALL
10	5412284AA	1	WELD, FOOT PEDAL - BLK -(Refer to Note: *)
11	5104262	2	PEDAL, Rubber -(S/N: 4001542418 and below)
12	5025015X6	2	BOLT, 7/16-14 X 3/4, GD 5 YZ
13	5025044	2	NUT, 7/16-14 HEX TOP LOCK
14	5025013X8	2	BOLT, 3/8-16 X 1" GD5 CZ
15	5025394	3	NUT, 3/8 - 16 HEX NYLOCK FLANGE
16	84008514	2	SPACER (.325 X .496 X 1.000)
17	5047199	1	SPACER, .38 x .50 x .75
18	5025013X16	1	BOLT, 3/8-16 X 2, GD5, CZ

Not For Reproduction

Footnotes:

Note: *All replacement foot pedal weldments will have welded pedals.

Copyright © Briggs & Stratton. All Rights reserved

Motion Control Group - Spring Assemblies

Note: Unless noted otherwise, use the standard torque specifications

Mfg. No: 5901498

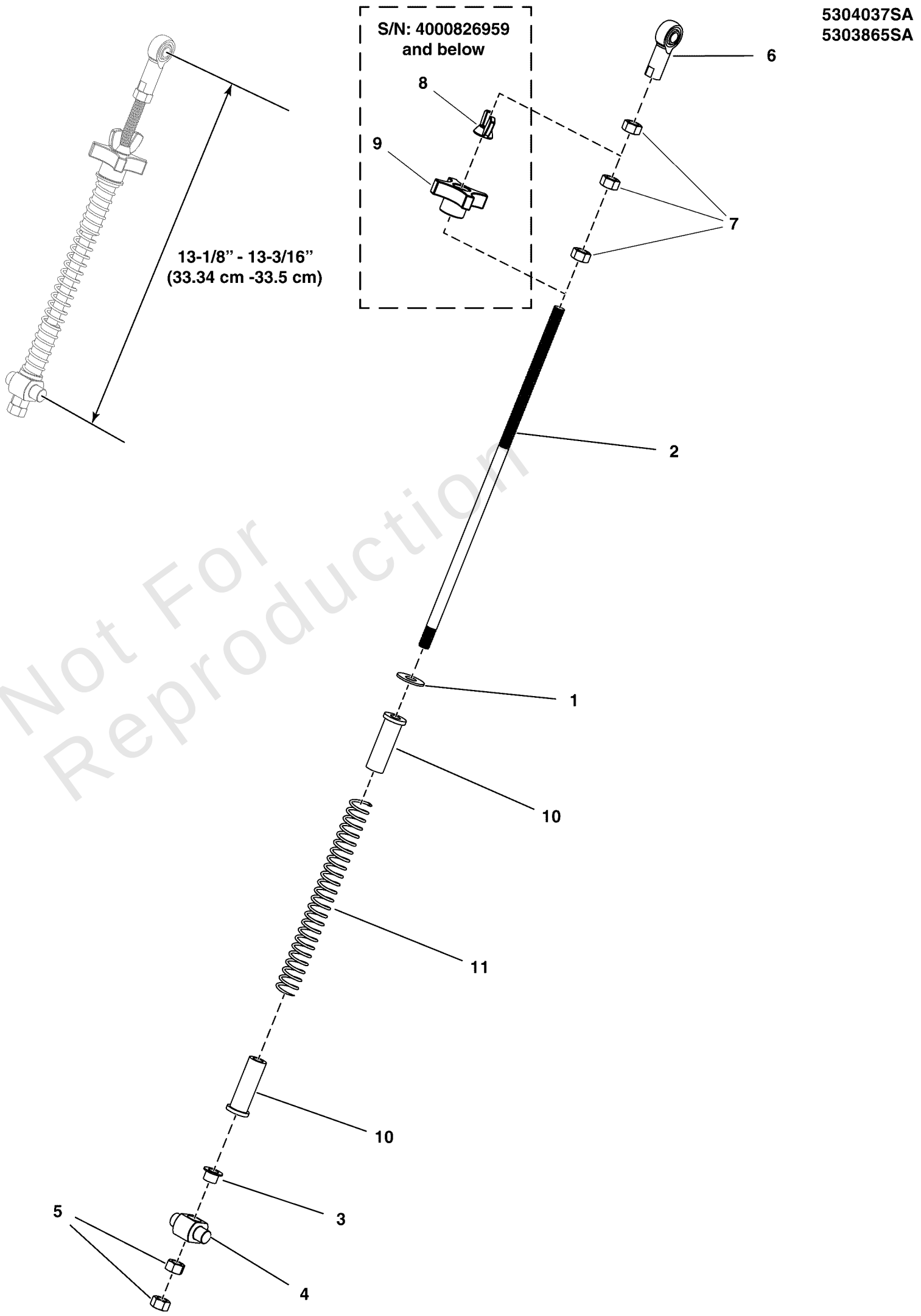

Not For Reproduction

Copyright © Briggs & Stratton. All Rights reserved

Motion Control Group - Spring Assemblies

REF NO	PART NO	QTY	DESCRIPTION
1	5025401	2	WASHER, 3/8 USS
2	5104229	2	ROD, CONTROL SYSTEM, WALK
3	5102773	2	BUSHING, .38ID X .47 OD X .38L, FL
4	5103022	2	TRUNION, 1/2" POSTS, STAINLESS
5	5025034	4	NUT, 3/8-16 HEX
6	5021683	2	BALL JOINT, 3/8-24 FEMALE
7	5025035	6	NUT, 3/8-24 HEX -(Qty: 2 - S/N: 4000826959 and below)
8	5025608	2	WING NUT, 3/8-24, CZ -(S/N: 4000826959 and below)
9	5104174	2	KNOB, 4 ARM, 3/8-24 -(S/N: 4000826959 and below)
10	5104375	4	FLANGED BUSHING, 3/8IDX.63ODX.8125FL
11	5104374	2	SPRING,COMP,.645IDX8.00LGX.080WR,BLK E-C

Not For Reproduction

Copyright © Briggs & Stratton. All Rights reserved

Motion Control Group - Upper (Centralized Controls)

Note: Unless noted otherwise, use the standard torque specifications

Mfg. No: 5901498

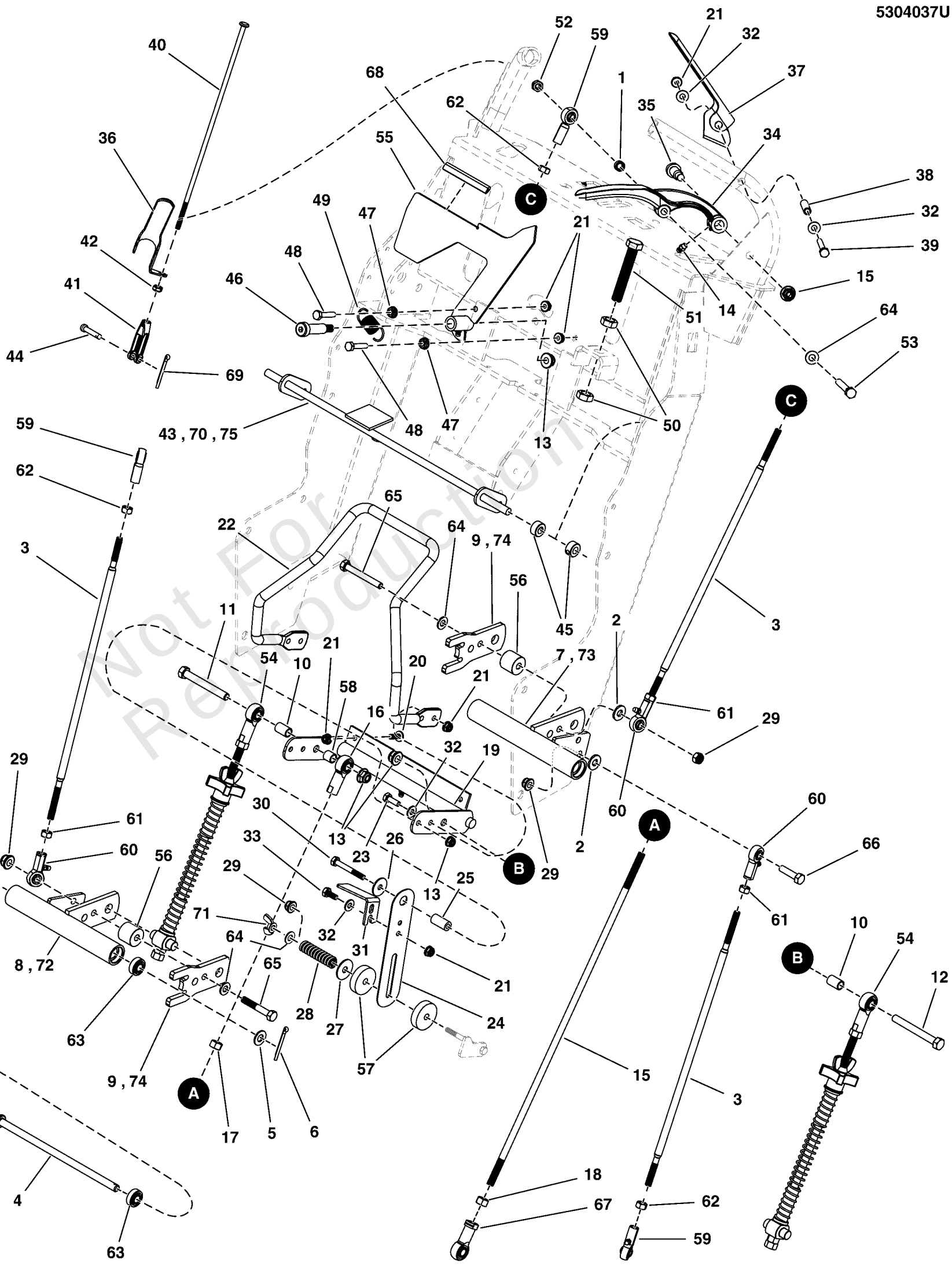

Not For Reproduction

Motion Control Group - Upper (Centralized Controls)

REF NO	PART NO	QTY	DESCRIPTION
1	5102463	2	SPACER, .33 X .50 X .25, PM, CZ
2	5025292	4	WASHER, 5/16 F436 FLAT
3	5104159	4	ROD, 5/16-24 X 15.48, LH-RH, CZ
4	5104328	2	ROD, 3/8 X 8.49, HEADED
5	5025156	2	WASHER, 3/8 SAE
6	5025203X10	2	PIN, COTTER, 1/8 X 1-1/4
7	5412616A	1	WELD, CENTER PIVOT HUB, LH - WALK - BLK -(S/N: 2017170234 & Below)
8	5412617A	1	WELD, CENTER PIVOT HUB, RH - WALK - BLK -(S/N: 2017170234 & Below)
9	5411633A	2	TAB, CONTROL PIVOT - BLK -(S/N: 2017170234 & Below)
10	5047199	2	SPACER, .38 X .50 X .75
11	5025013X24	1	BOLT, 3/8-16 X 3" GD5 CZ
12	5025013X16	1	BOLT, 3/8-16 X 2, GD5, CZ
13	5025394	6	NUT, 3/8-16 HEX NYLOCK FLANGE
14	5020095	2	GREASE FITTING, 1/4-28 STRAIGHT
15	5104164	1	ROD, 3/8-24, 19.00, LH-RH CZ
16	5021683	1	BALL JOINT, 3/8-24 FEMALE
17	5025035	1	NUT, 3/8-24 HEX
18	5025317	1	NUT, 3/8-24 HEX, LH
19	5412891A	1	NLA - WELD, SPEED CONTROL, SW35 - BLK
20	1960715	2	SCREW-TRUSS HD TORX DR 1/4-20X0.750 T27
21	5025391	12	NUT, 1/4-20 HEX NYLOCK FLANGE
22	5412664A	1	WELD, SPEED BAR - BLK
23	5025010X6	3	BOLT, 1/4-20 X 3/4 GD5 CZ
24	5409272	1	PLATE, FRICTION CONTROL, SS
25	5101274	1	SPACER, .26 X .50 X 1.00
26	5025288	1	WASHER, 1/4 FENDER
27	5025164	1	WASHER, 5/16 FENDER
28	5104221	1	SPRING, COMP, .40 X .60 X 2.25, BLACK
29	5025392	6	NUT, 5/16-18 HEX NYLOCK FLANGE -(Qty: 7 - S/N: 2017118253 & Below)
30	5025010X16	1	BOLT, 1/4-20 X 2”, GD5
31	5412363A	1	BRACKET, SWITCH ENGAGEMENT - BLK
32	5025154	9	WASHER, 1/4 SAE
33	-----	2	HHCS, 1/4-20 X 0.625, GR5, ZINC/CLEAR
34	5102556A	2	HANDLE, REVERSING - BLK
35	5109888	2	BOLT, 3/8-16 X 1/2, 1.00 SHOULDER, CZ
36	5104201A	1	NLA - FLAP, OPS - BLK
37	5104202A	1	NLA - FLAP, OPS - BLK
38	5101215	2	SPACER, .26 X .38 X 1.25, CZ
39	5025010X14	2	BOLT, 1/4-20 X 1-3/4 GD5 CZ
40	5101242	2	ROD, OPC LINK, SNP PRO WB
41	84007748	2	CLEVIS
42	7090095	2	HN, 1/4F GR5 YZ
43	5412020A	1	WELD, OPC ROD, WALK - BLK -(S/N: 2017118253 & Below)
44	5025212X7	2	PIN, CLEVIS, 1/4 X 7/8, PLATED
45	5010546	2	COLLAR, 3/8 SET
46	5025220	1	BOLT-3/8-16 x 1-1/2, 1/2 SHOULDER
47	5025126	2	NUT, 1/4-20 HEX SERR. FLANGE
48	5025010X10	2	BOLT, 1/4-20 X 1-1/4 GD5 CZ

Not For Reproduction

Copyright © Briggs & Stratton. All Rights reserved

Motion Control Group - Upper (Centralized Controls)

Note: Unless noted otherwise, use the standard torque specifications

Mfg. No: 5901498

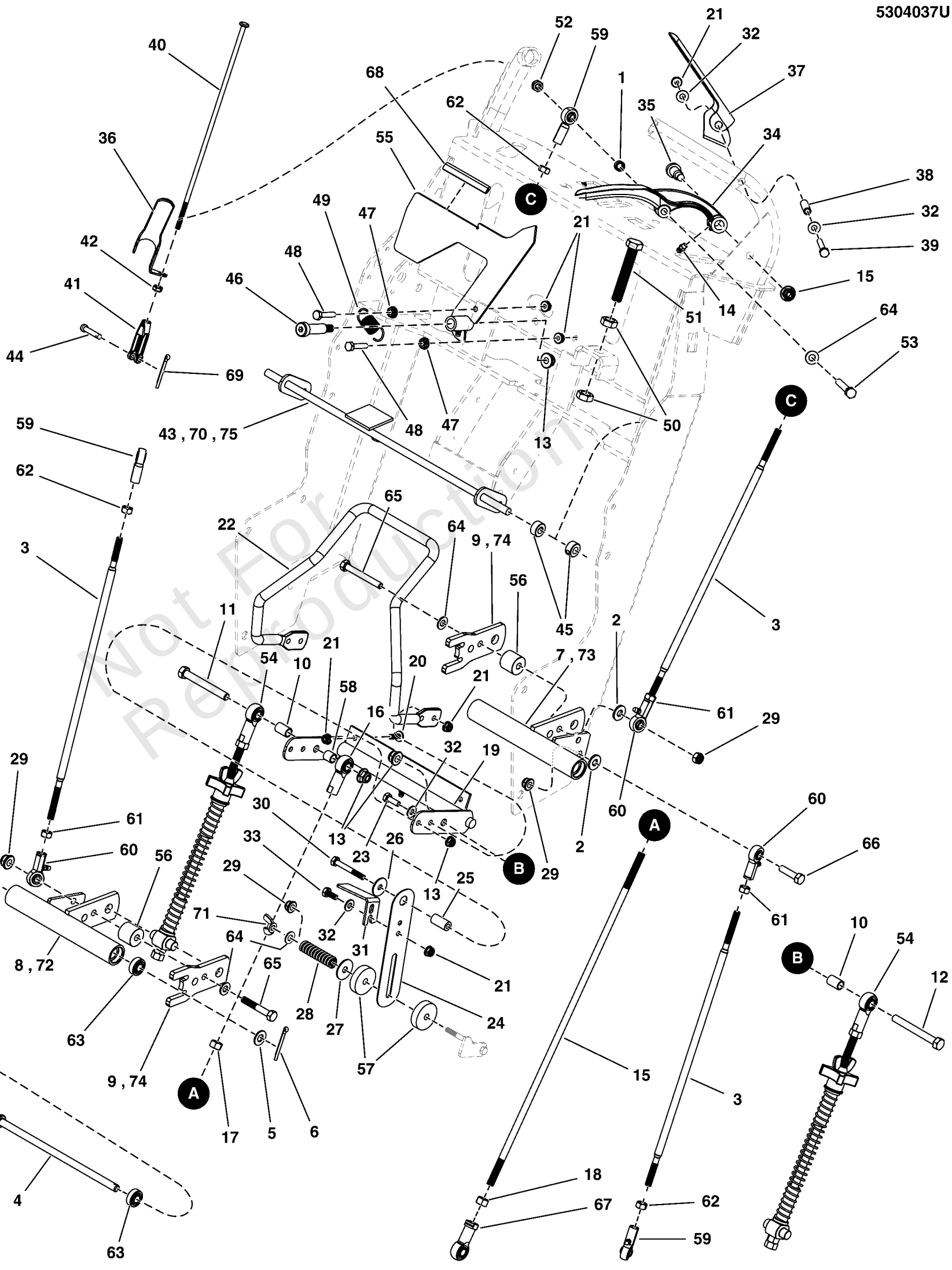

Not For Reproduction

Motion Control Group - Upper (Centralized Controls)

REF NO	PART NO	QTY	DESCRIPTION
49	5105337	1	SPRING, EXT, 0.525 X 0.058 X 2.250 SS
50	5025089	2	NUT, 1/2-20 HEX JAM
51	5025426	1	BOLT, 1/2-20 X 2-1/2, FLT
52	5025057	2	NUT, 5/16-18 HEX NYLON LOCK
53	5025011X18	2	BOLT, 5/16-18 X 2-1/4 GD5 CZ
54	-----	1	SEE MOTION CONTROL GROUP - SPRING ASSEMBLIES
55	5413693A	1	WELD, SPEED INDICATOR, W25 - BLK
56	5104351	2	SPACER, .33 X 1.00 X .88, CZ
57	5104176	2	PAD, T-712 FRICTION MATERIAL
58	5101640	1	SPACER, .38 X .50 X .50
59	5104493	4	BALL JOINT 5/16-24 RH FEMALE BRONZE RACE
60	5104494	4	BALL JOINT 5/16-24 LH FEMALE BRONZE RACE
61	5023212	4	NUT, 5/16-24 HEX, LH
62	5025033	4	NUT, 5/16-24 HEX
63	5102003	4	BEARING, .375" ID X .875" OD X .341" THK
64	5025155	3	WASHER, 5/16" SAE -(Qty: 2 - S/N: 2017118253 & Below)
65	5025011X20	2	BOLT, 5/16-18 X 2-1/2 GD5 CZ
66	5025011X10	2	BOLT, 5/16-18 X 1-1/4 GD5 CZ
67	5022392	1	BALL JOINT, 3/8-24 FEMALE, LH
68	5104568	1	U-CHANNEL, RPVC #6236 X 4"
69	80002736	1	PIN, 3/32 X 0.750, COT, ZINC/CLEAR
70	5413926A	1	WELD, OPC ROD, WALK - BLK -(S/N: 2017118254 - 2017170234)
71	703429	1	NUT, Wing, 5/16-18 -(S/N: 2017118254 & Above)
72	5414181A	1	WELD, W25 CONTROL PIVOT, RH - BLK -(S/N: 2017170235 & Above)
73	5414182A	1	WELD, W25 CONTROL PIVOT, LH - BLK -(S/N: 2017170235 & Above)
74	5414411A	2	TAB, PIVOT, W35 - BLK -(S/N: 2017170235 & Above)
75	5414516A	1	WELD, OPC ROD, WALKBEHIND - BLK -(S/N: 2017170235 & Above)

Not For Reproduction

Copyright © Briggs & Stratton. All Rights reserved

Parking Brake Group

Note: Unless noted otherwise, use the standard torque specifications

Mfg. No: 5901498

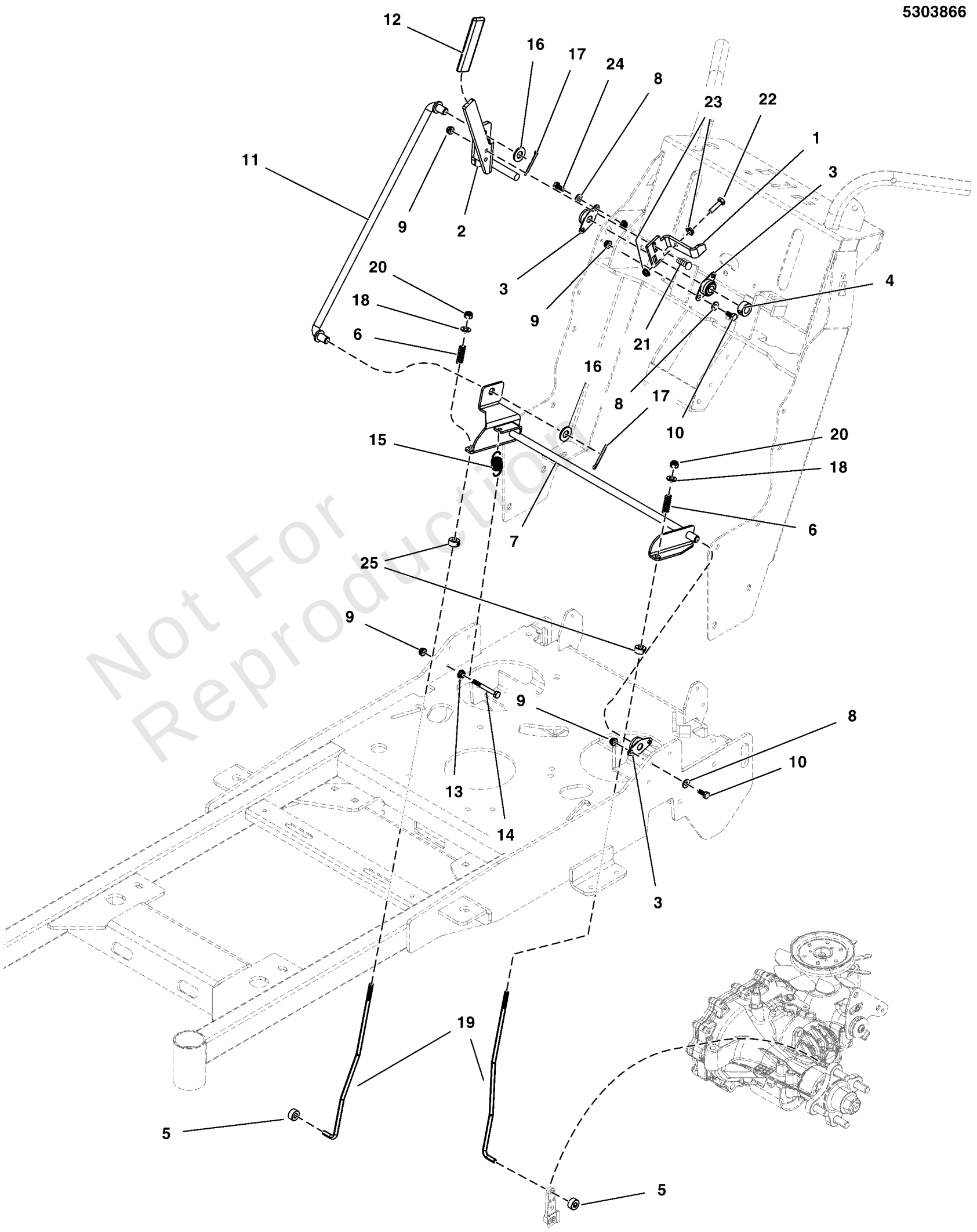

Not For Reproduction

Copyright © Briggs & Stratton. All Rights reserved

Parking Brake Group

REF NO	PART NO	QTY	DESCRIPTION
1	5413511A	1	PLATE, NEUTRAL LOCKOUT, SW25 - BLK
2	5412860A	1	WELD, PARKING BRAKE HANDLE - BLK
3	5101123	4	BEARING, 1/2 FLANGED, PLASTIC BALL
4	5010580	1	COLLAR, 1/2 SET
5	5020047	2	COLLAR, 5/16 SET
6	5020637	2	SPRING-COMP, .375IDX2.75LGX.054WR, SS
7	5412846A	1	WELD, PARKING BRAKE, SW25/FW25 - BLK
8	5025154	8	WASHER, 1/4 SAE
9	5025391	11	NUT, 1/4-20 HEX NYLOCK FLANGE
10	5025010X6	6	BOLT-1/4-20 X 3/4 GD5 CZ
11	5104401	1	ROD, PARKING BRAKE, SW25
12	5025510	1	GRIP, FOAM, 1/4 X 1 X 4.1
13	5025126	1	NUT, 1/4-20 HEX SERR. FLANGE
14	5025010X18	1	BOLT, 1/4-20 X 2-1/4 GD5 CZ
15	5010213	1	SPRING-EXT, .740 ODX2.025LGX.072WR, BLK
16	5025158	2	WASHER, 1/2 SAE
17	5025203X10	2	PIN, COTTER, 1/8 X 1-1/4
18	5025155	2	WASHER, 5/16" SAE
19	5104496	2	ROD, BRAKE CTRL, LOWER, SW25/FW25
20	5025045	2	NUT, 5/16-24 HEX NYLON LOCK
21	80005053	2	BOLT, 1/4-20X1.000,GR5,STD NECK,SQ ZC/CL
22	5025010X8	1	BOLT, 1/4-20 X 1" GD5 CZ
23	5025126	2	NUT, 1/4-20 HEX SERR. FLANGE
24	1960715	2	CREW-TRUSS HD TORX DR 1/2-20X0.750 T27
25	5104748	2	COLLAR, DOUBLE SPLIT, 7MM

Not For Reproduction

Copyright © Briggs & Stratton. All Rights reserved

Transaxle Drive Group

Note: Unless noted otherwise, use the standard torque specifications

Mfg. No: 5901498

5303867

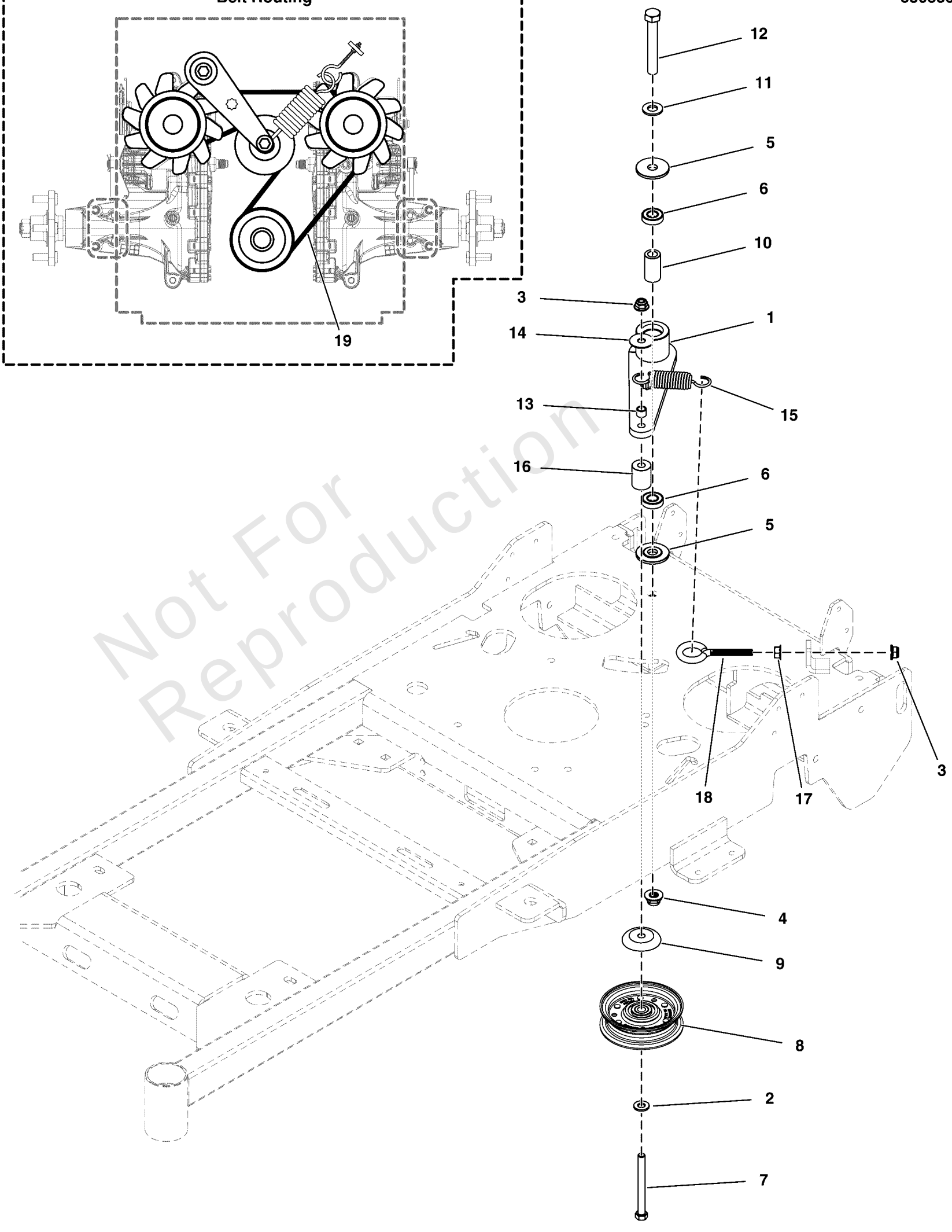

Not For Reproduction

Copyright © Briggs & Stratton. All Rights reserved

Transaxle Drive Group

REF NO	PART NO	QTY	DESCRIPTION
1	5413130A	1	WELD, IDLER ARM, 6.63" LG - BLK
2	5025293	1	WASHER, 3/8" GR. 9 FLAT
3	5025394	2	NUT, 3/8 - 16 HEX NYLOCK FLANGE
4	5025396	1	NUT, Hex Flange, Nylock, 1/2-13
5	5103262	2	SPACER, IDLER ARM, 1/2, PM
6	7078243	2	BEARING, BALL, AXLE
7	5025013X28	1	BOLT, 3/8-16 X 3-1/2" GD5 CZ
8	5104514	1	PULLEY, FLAT IDLER, FLG, 4"ODX3/8"ID, CZ
9	5103787	1	SHIELD, BEARING PULLEY, 3/8ID, CZ
10	5103812	1	SPACER, .52 X .84 X 1.53, PM
11	5025158	1	WASHER, 1/2 SAE
12	5025017X28	1	BOLT, 1/2-13 X 3-1/2, HEX HD, GD5, CZ (SV)
13	1611705	1	SPACER-0.385ID 0.623OD 0.290LG P'MTL
14	5025401	1	WASHER, 3/8" USS
15	5104545	1	SPRING-EXT, 1.125 ODX4.679LGX.146WR, BLK
16	5103427	1	SPACER, .39 X 1.00 X 1.25, PM, CZ
17	5025128	1	NUT, 3/8-16 Hex Large Serrated Flange
18	5025429	1	EYEBOLT, 3/8-16 X 4, 2.13THRD, .75EYE, C
19	5104354	1	BELT, A-SEC, COG TYPE, 57" EL, ARAMID

Not For Reproduction

Copyright © Briggs & Stratton. All Rights reserved

Front Wheels & Tires

5303868

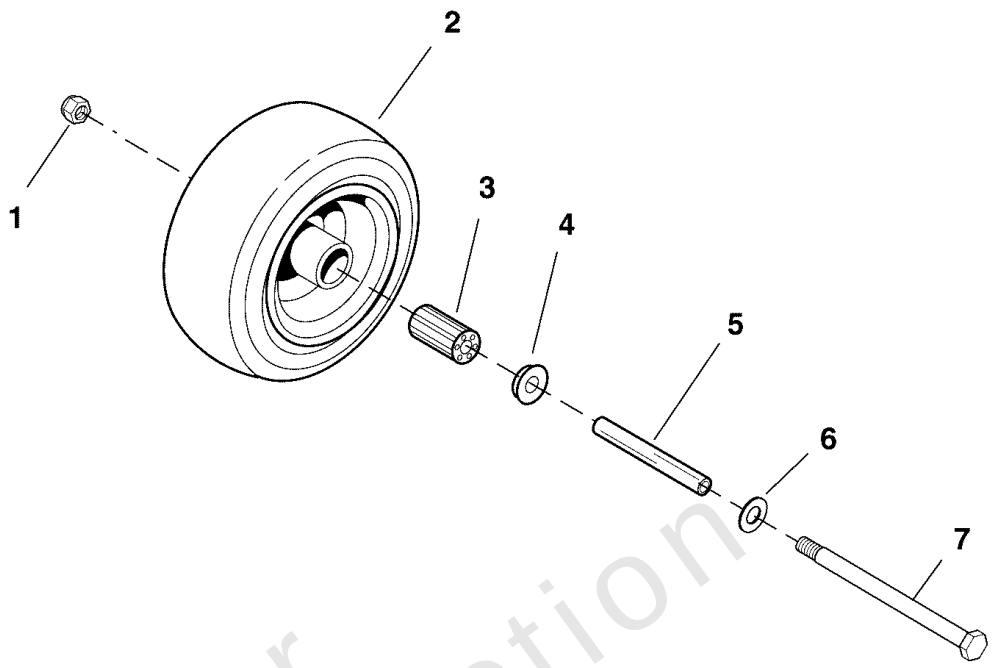

Flat Free Tire

Rear Wheels & Tires

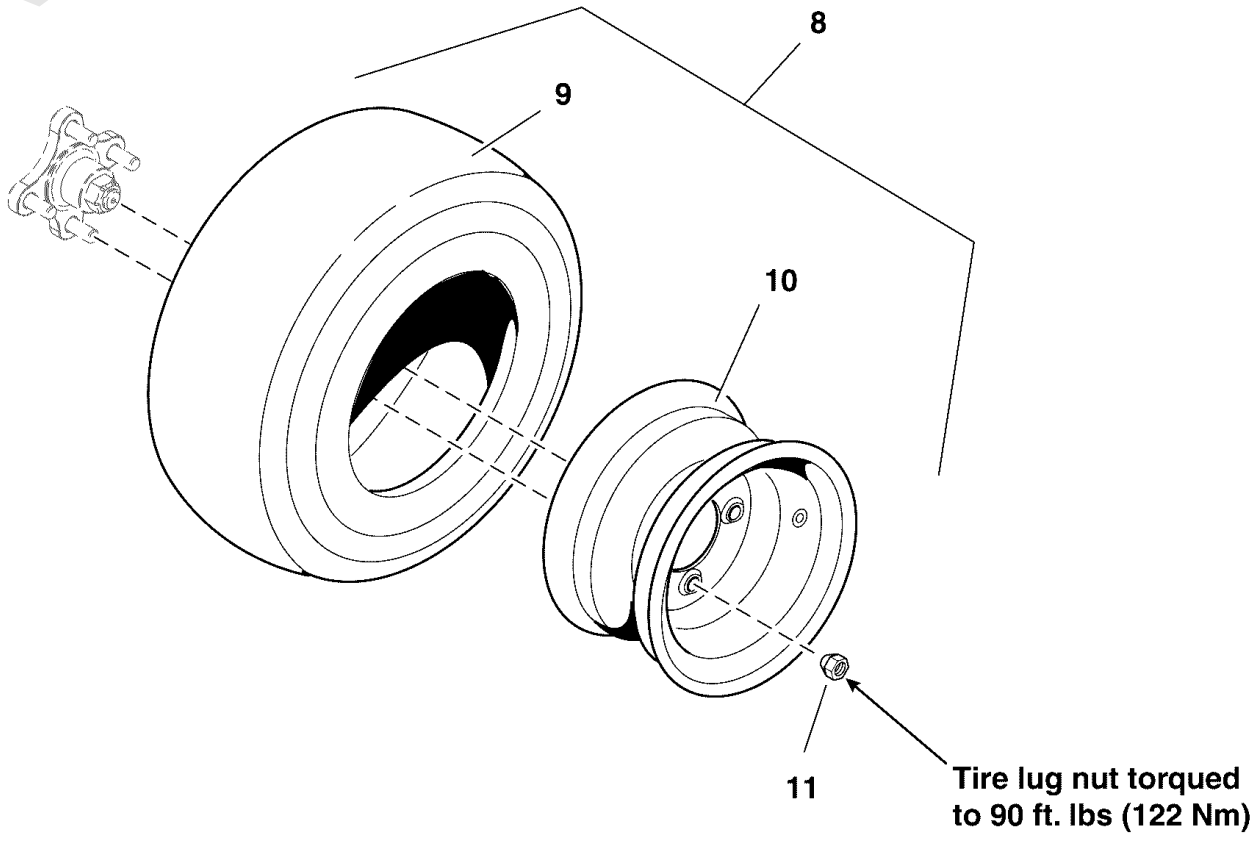

Inflate to 15 psi (1,03 bar)

Not For Reproduction

Wheel & Tire Group

REF NO	PART NO	QTY	DESCRIPTION
1	5025396	2	NUT, Hex Flange, Nylock, 1/2-13
2	5100790	2	TIRE ASSM, 9 X 3.5 - 4, FF / CB
3	5021182	2	BEARING, ROLLER 3/4" ID X 3.25" (ONE PER TIRE)(SV) -(SV)
4	5021043	4	RETAINER, BEARING -(SV)
5	5041657	2	AXLE, CASTER WHEEL
6	5025158	2	WASHER, 1/2 SAE
7	5025017X48	2	BOLT, 1/2-13 X 6 GD5 CZ
8	5101068	2	TIRE ASSM, 20 X 7 - 10, TURF, 4 BOLT
9	5101068X1	2	TIRE, 20X7.00-10NHS, TURF MASTER -(SV)
10	5101068X2	2	WHEEL, 10 X 6.00 4/4 SOLID, F237 -(SV)
11	5020601	8	NUT, 1/2-20, FOR WHEEL BOLT SILVER

Not For Reproduction

Copyright © Briggs & Stratton. All Rights reserved

Hardware Identification & Torque Specifications

Torque Specification Chart

FOR STANDARD METRIC MACHINE HARDWARE (Tolerance ± 20%)

Property Class	5.6 Class 5.6		8.8 Class 8.8		10.9 Class 10.9		12.9 Class 12.9	
Size Of Hardware	*in/lbs* **ft/lbs**	Nm.	*in/lbs* **ft/lbs**	Nm.	*in/lbs* **ft/lbs**	Nm.	*in/lbs* **ft/lbs**	Nm.
M3	*5.88*	*.56*	*13.44*	*1.28*	*19.2*	*1.80*	*22.92*	2.15
M4	*13.44*	*1.28*	*30.72*	*2.90*	*43.44*	*4.10*	*52.56*	4.95
M5	*26.4*	*2.50*	*60.96*	*5.75*	**5.97**	*8.10*	**7.15**	9.7
M6	*44.64*	*4.3*	**7.3**	*9.9*	**10.3**	*14*	**12.1**	16.5
M7	**5.2**	*7.1*	**12.1**	*16.5*	**16.9**	*23*	**19.9**	27
M8	**7.7**	*10.5*	**17.7**	*24*	**25**	*34*	**29**	40
M10	**15**	*21*	**35**	*48*	**50**	*67*	**59**	81
M12	**26**	*36*	**61**	*83*	**86.2**	*117*	**103**	140
M14	**42**	*58*	**101**	*132*	**136**	*185*	**162**	220
M16	**64**	*88*	**147**	*200*	**210**	*285*	**250**	340
M18	**89**	*121*	**202**	*275*	**287**	*390*	**346**	470
M20	**126**	*171*	**290**	*390*	**405**	*550*	**486**	660
M22	**169**	*230*	**390**	*530*	**559**	*745*	**656**	890
M24	**217**	*295*	**497**	*375*	**708**	*960*	**840**	1140
M27	**320**	*435*	**733**	*995*	**1032**	*1400*	**1239**	1680
M30	**435**	*590*	**995**	*1350*	**1401**	*1900*	**1681**	2280
M33	**590**	*800*	**1349**	*1830*	**1902**	*2580*	**2278**	3090
M36	**759**	*1030*	**1740**	*2360*	**2441**	*3310*	**2935**	3980
M39	**988**	*1340*	**2249**	*3050*	**3163**	*4290*	**3798**	5150

The guides and ruler furnished below are designed to help you select the appropriate hardware.

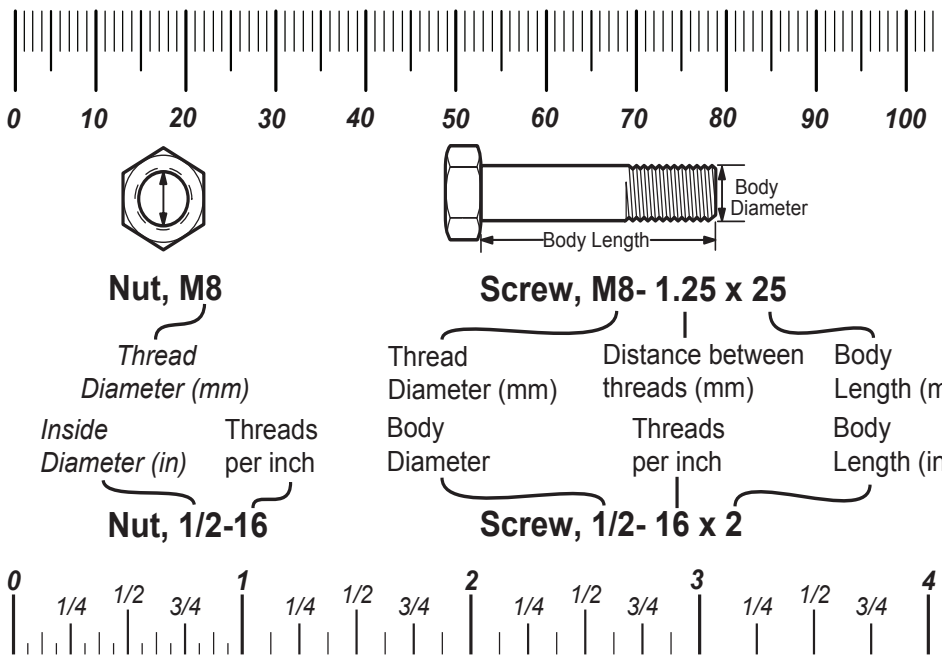

Standard Hardware Sizing

When a washer or nut is identified as **1/2"** (M8), this is the *Nominal size*, meaning the *inside diameter* is 1/2 inch (8mm metric thread diameter); if a second number is present it represents the *threads per inch* (distance between threads).

When bolt or capscrew is identified as **1/2 - 16 x 2"** (M8 - 1.25 x 50), this means the *Nominal size*, or body diameter is 1/2 inch (8mm metric thread diameter), the second number,16, represents the *threads per inch, (distance between threads).* The final number is the body length of the bolt or screw, 2 inches (50mm).

Torque Specification Chart

FOR STANDARD MACHINE HARDWARE (Tolerance ± 20%)

Hardware Grade	No Marks SAE Grade 2		SAE Grade 5		SAE Grade 8	
Size Of Hardware	*in/lbs* **ft/lbs**	Nm.	*in/lbs* **ft/lbs**	Nm.	*in/lbs* **ft/lbs**	Nm.
8-32	*19*	2.1	*30*	3.4	*41*	4.6
8-36	*20*	2.3	*31*	3.5	*43*	4.9
10-24	*27*	3.1	*43*	4.9	*60*	6.8
10-32	*31*	3.5	*49*	5.5	*68*	7.7
1/4-20	*66*	7.6	**8**	10.9	**12**	16.3
1/4-28	*76*	8.6	**10**	13.6	**14**	19.0
5/16-18	**11**	15.0	**17**	23.1	**25**	34.0
5/16-24	**12**	16.3	**19**	25.8	**29**	34.0
3/8-16	**20**	27.2	**30**	40.8	**45**	61.2
3/8-24	**23**	31.3	**35**	47.6	**50**	68.0
7/16-14	**30**	40.8	**50**	68.0	**70**	95.2
7/16-20	**35**	47.6	**55**	74.8	**80**	108.8
1/2-13	**50**	68.0	**75**	102.0	**110**	149.6
1/2-20	**55**	74.8	**90**	122.4	**120**	163.2
9/16-12	**65**	88.4	**110**	149.6	**150**	204.0
9/16-18	**75**	102.0	**120**	163.2	**170**	231.2
5/8-11	**90**	122.4	**150**	204.0	**220**	299.2
5/8-18	**100**	136	**180**	244.8	**240**	326.4
3/4-10	**160**	217.6	**260**	353.6	**386**	525.0
3/4-16	**180**	244.8	**300**	408.0	**420**	571.2
7/8-9	**140**	190.4	**400**	544.0	**600**	816.0
7/8-14	**155**	210.8	**440**	598.4	**660**	897.6
1-8	**220**	299.2	**580**	788.8	**900**	1,244.0
1-12	**240**	326.4	**640**	870.4	**1,000**	1,360.0

NOTES

1. These torque values are to be used for all hardware excluding: locknuts, self-tapping screws, thread forming screws, sheet metal screws and socket head setscrews.
2. Recommended seating torque values for locknuts:
   a. for prevailing torque locknuts - use 65% of grade 5 torques.
   b. for flange whizlock nuts and screws - use 135% of grade 5 torques.
3. Unless otherwise noted on assembly drawings, all torque values must meet this specification.

Common Hardware Types

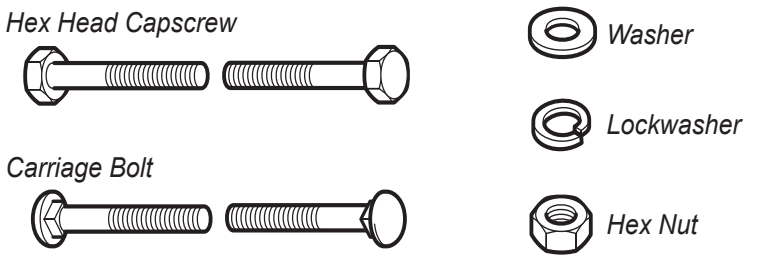

Wrench & Fastener Size Guide

1/4" Bolt or Nut Wrench—7/16"

5/16" Bolt or Nut Wrench—1/2"

3/8" Bolt or Nut Wrench—9/16"

7/16" Bolt or Nut Wrench (Bolt)—5/8" Wrench (Nut)—11/16"

1/2" Bolt or Nut Wrench—3/4"

M6 Bolt or Nut Wrench—10mm

M8 Bolt or Nut Wrench—13mm

M10 Bolt or Nut Wrench—17mm

M12 Bolt or Nut Wrench—19mm

M14 Bolt or Nut Wrench—22 mm

Copyright © Briggs & Stratton. All Rights reserved