Parts Manual

Mfg. No: 7800968-00

CRP2187520, 21" 8.75 GTP Steel Deck
Commercial Series 20

Copyright © Briggs & Stratton. All Rights reserved

16-Apr-2024

7060935YP - 21" Grass Catcher Kit. . . . . .
7060936YP - 21" Grass Catcher Kit. . . . . .

Not For Reproduction

Copyright © Briggs & Stratton. All Rights reserved

Model Components

Page

Decal Group. 4
Deck, Engine & Blade Group. 6
Drive System, Self Propelled. 8
Handle Group. 12
Transmission Assembly. 14
Wheels, Brackets & Latches. 16
Torque Specification Chart. 18

Not For Reproduction

Copyright © Briggs & Stratton. All Rights reserved

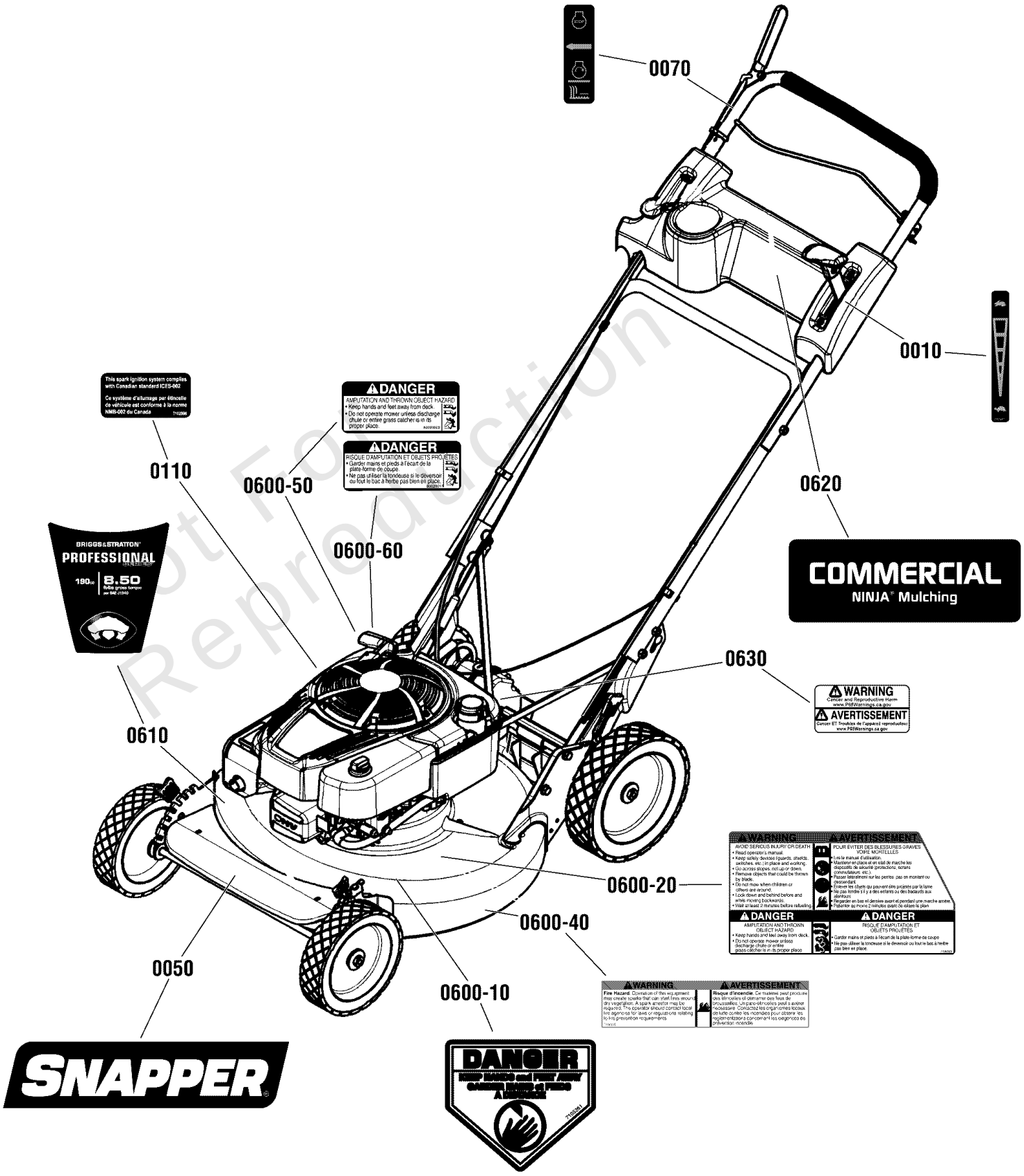

Not For Reproduction

Decal Group

REF NO	PART NO	QTY	DESCRIPTION
0010	7075471YP	1	DECAL, Speed Shift
0050	7104148YP	1	DECAL, LOGO, REAR
0070	7029782MA	1	DECAL, OPC Bail International Symbol
0110	7102996YP	1	DECAL, ICES, Canadian Spark Compliance
0600	7106353	1	SHEET, DECAL, WBM COMPLIANCE
0600-10	7105261YP	1	DECAL, CPSC, French/English
0600-20	-----	1	DECAL, Warning/Danger, English/French -(Included on Decal Sheet #7106353YP)
0600-40	-----	1	DECAL, Spark Arrestor, English/French -(Included on Decal Sheet #7106353YP)
0600-50	-----	1	DECAL, Danger, English -(Included on Decal Sheet #7106353YP)
0600-60	-----	1	DECAL, Danger, French -(Included on Decal Sheet #7106353YP)
0610	7106320YP	1	DECAL, Turtle, 8.50TP
0620	7106324YP	1	DECAL, Commercial Ninja
0630	84002303	1	LABEL, WARNING

Not For Reproduction

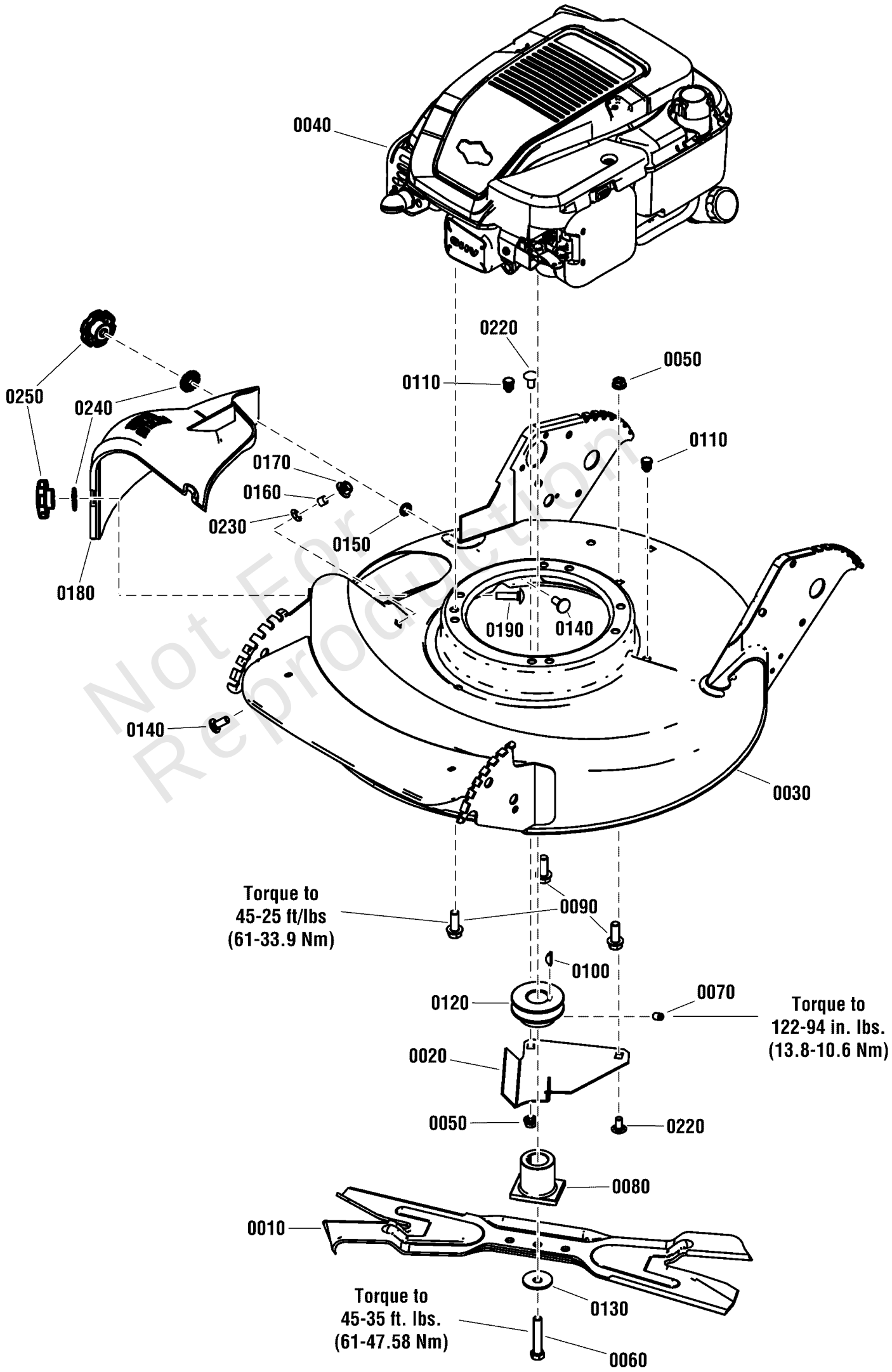

Not For Reproduction

Deck, Engine & Blade Group

REF NO	PART NO	QTY	DESCRIPTION
0010	7026407AYP	1	BLADE, 21” Ninja
0020	7074568YP	1	COVER, Belt, Zinc/Clear
0030	7400026DYP	1	WELDMENT, DECK, 21” AIR, Non-Adj.
0040	121Q42-0016-F1	1	* ENGINE, B&S PRO, 8.5TP, 121Q42-0016-F1 -7106312
0050	703409	2	NUT, 5/16-18, GR5
0060	703999	1	SCREW, 3/8-24 X 2, Hex Head Cap, GR5
0070	704003	1	SCREW, 5/16-18 X .50, Hex Socket Head, Phosp/Oil
0080	7101414YP	1	HUB, Blade, 21 WBM, 25MM ID, 2 Position
0090	704000	3	SCREW, 3/8-16 X 1.0, Hex Washer Self-Tap, ZC/CL
0100	7091214YP	1	KEY, HI-PRO, .1875X.656, #605
0110	7046780SM	2	PLUG, Hole, .44” OD
0120	7105122YP	1	PULLEY, Engine (25mm I. D. x 2-1/8 O.D.)
0130	703963	1	WASHER, CONE
0140	703185	2	BOLT, Round Head, Short Square Neck
0150	703297	1	RETAINER, GR5, 5/16
0160	7024340SM	1	SPACER, .375 OD X .316 ID X .305 L
0170	704001	1	NUT, 5/16-18
0180	7029149YP	1	COVER, Mulching, 21” Deck
0190	704002	1	BOLT,5/16-18X1.125
0220	703447	2	BOLT, 5/16-18X.625 G5
0230	704015	1	WASHER, FLAT 5/16
0240	703936	2	WASHER, .325IDX.850OD
0250	7101022YP	2	KNOB, (5/16-18 X 1/2 Thread) Fluted

Not For Reproduction

Footnotes:

NOTE: * Purchase engine & engine parts from engine service outlets.

Copyright © Briggs & Stratton. All Rights reserved

Drive System, Self Propelled

Note: Unless noted otherwise, use the standard torque specifications

Mfg. No: 7800968-00

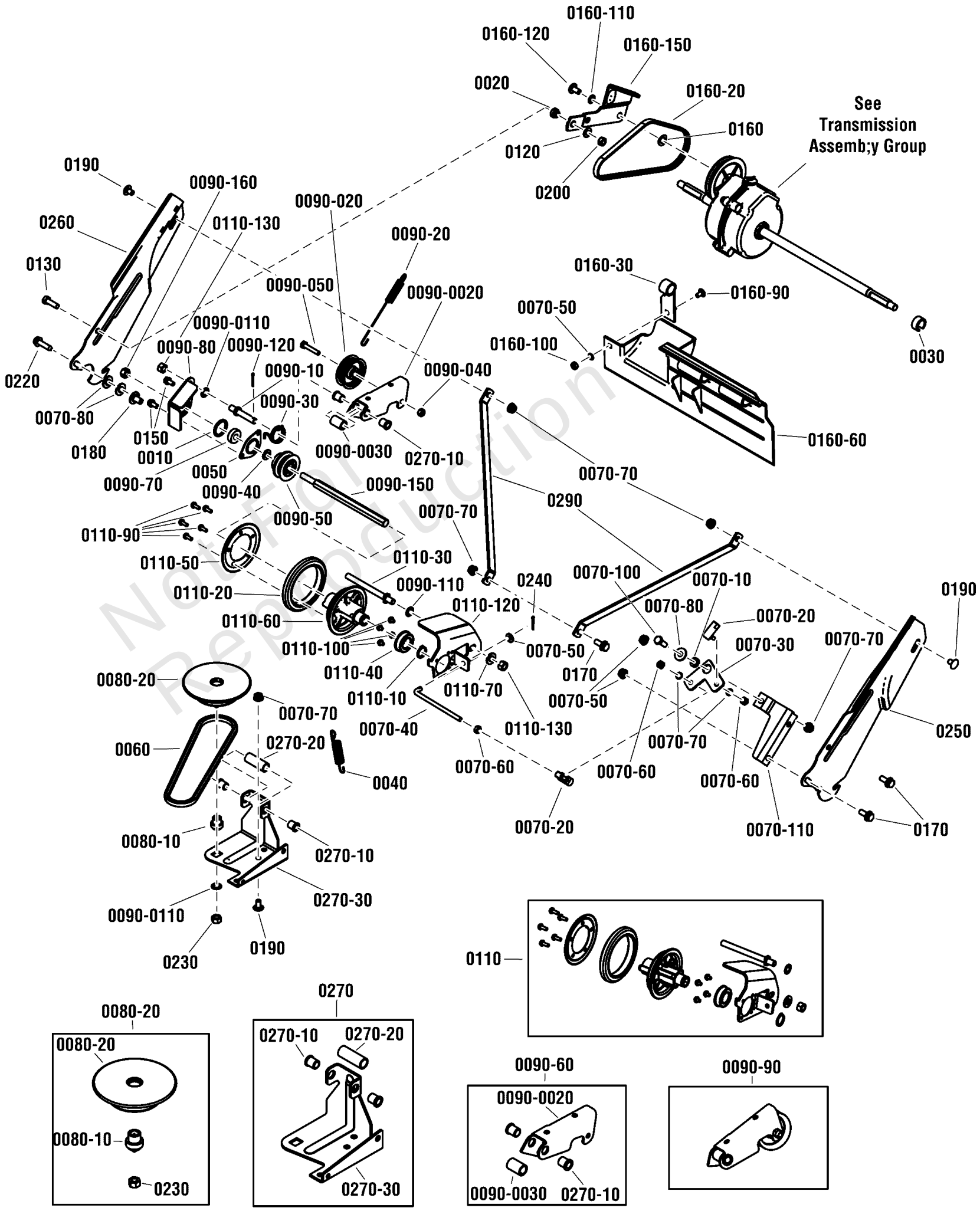

Not for Reproduction

Copyright © Briggs & Stratton. All Rights reserved

Drive System, Self Propelled

REF NO	PART NO	QTY	DESCRIPTION
0010	704008	1	O-RING, 1IDX1.25X.125
0020	7012114SM	1	BUSHING, Differential Link
0030	704009	1	RING, .68IDX.93X.44
0040	7029025YP	1	SPRING, Extension, .58 x 3.2
0050	7031809YP	1	HOLDER, Bearing (Outer Half), ZC/CL
0060	7046784YP	1	BELT, Engine Drive (Stretch)
0070-10	703970	1	SPACER
0070-20	7015753YP	2	BALL JOINT, 1/4-28
0070-30	7073913YP	1	BELL CRANK, Black Zinc
0070-40	7074145YP	1	LINK, Transfer (1/4-28 thread)
0070-50	703462	3	WASHER, LOCK, 1/4
0070-60	703461	3	NUT, 1/4-28 Hex, GR5, Zinc/Clear
0070-70	703409	7	NUT, 5/16-18, GR5
0070-80	7900022YP	3	FW, YZ
0070-100	703408	1	CAPSCREW, 5/16-18
0070-110	7073822BMYP	1	BRACKET, Bell Crank
0080	7061275YP		KIT, Drive Disc, Steel (includes Disc, Bushing & Nut)
0080-10	703971	1	BUSHING
0080-20	7073528YP	1	DRIVE DISC, Steel (Includes Bushing)
0090-10	703836	1	STUD, 3/8-24X2.380
0090-20	7012122YP	1	SPRING, Clutch, Adjustable Tension
0090-30	7012126YP	1	SPRING, Idler Torsion
0090-40	703946	1	WASHER, .39IDX.72OD
0090-50	7019383YP	1	PULLEY, Poly-V, 2" OD, .65" Wide, Steel
0090-70	7028014YP	1	BALL BEARING, Spherical O.D., .38 I.D.
0090-80	7031873YP	1	HOLDER, Bearing (Inner Half)
0090-90	7051921YP	1	ASSEMBLY, Clutch Idler (Pulley, Nut, Bolt, Bushings & Spacer)
0090-020	7012124YP	1	PULLEY, Flat Idler, .25 ID, 2.25 OD
0090-040	703972	1	NUT, HEX TOP, 1/4-28
0090-050	703828	1	CAPSCREW, 1/4-28X1.75
0090-060	7600173YP	1	KIT, Idler Arm, Bushing & Spacer Assembly
0090-0020	7032832AYP	1	ARM, CLUTCH IDLER
0090-0030	703974	1	SPACER, Idler Arm (.500 ID x .970 Long), ZC/CL
0090-110	703930	3	WASHER, INT LCK, 3/8
0090-120	703312	1	PIN, COTTER, 3/32X.75
0090-150	7072284YP	1	SHAFT, Hex (3/8-24 thread, one end)
0090-160	703458	1	NUT, HEX, 3/8-24
0110	7600109YP	1	KIT, DRIVEN DISC ASSY
0110-10	703975	1	RETAINER, RING, 3/4
0110-20	704059	1	RING, 3IDX4ODX.56THK
0110-30	703837	1	STUD, 3/8-24X4.5
0110-40	7029027YP	1	BEARING, 3/4” ID, Ball, Commercial
0110-50	7031013YP	1	PLATE, Driven Tire Side
0110-60	7061276YP	1	HUB / DRIVEN DISC KIT
0110-70	703590	1	WASHER, FLAT, .406
0110-90	704060	7	SCREW,HEX, #10-24X.5
0110-100	704061	4	SCREW,HEX, #10-32X.25
0110-120	7300977BMYP	1	THRUST PLATE, Short, Black
0110-130	703895	2	NUT, HEX, 3/8-24
0120	703350	1	WASHER
0130	MT910828MA	1	BOLT,5/16-24 X 1.00,HEX,ZC/CL

Not For Reproduction

Copyright © Briggs & Stratton. All Rights reserved

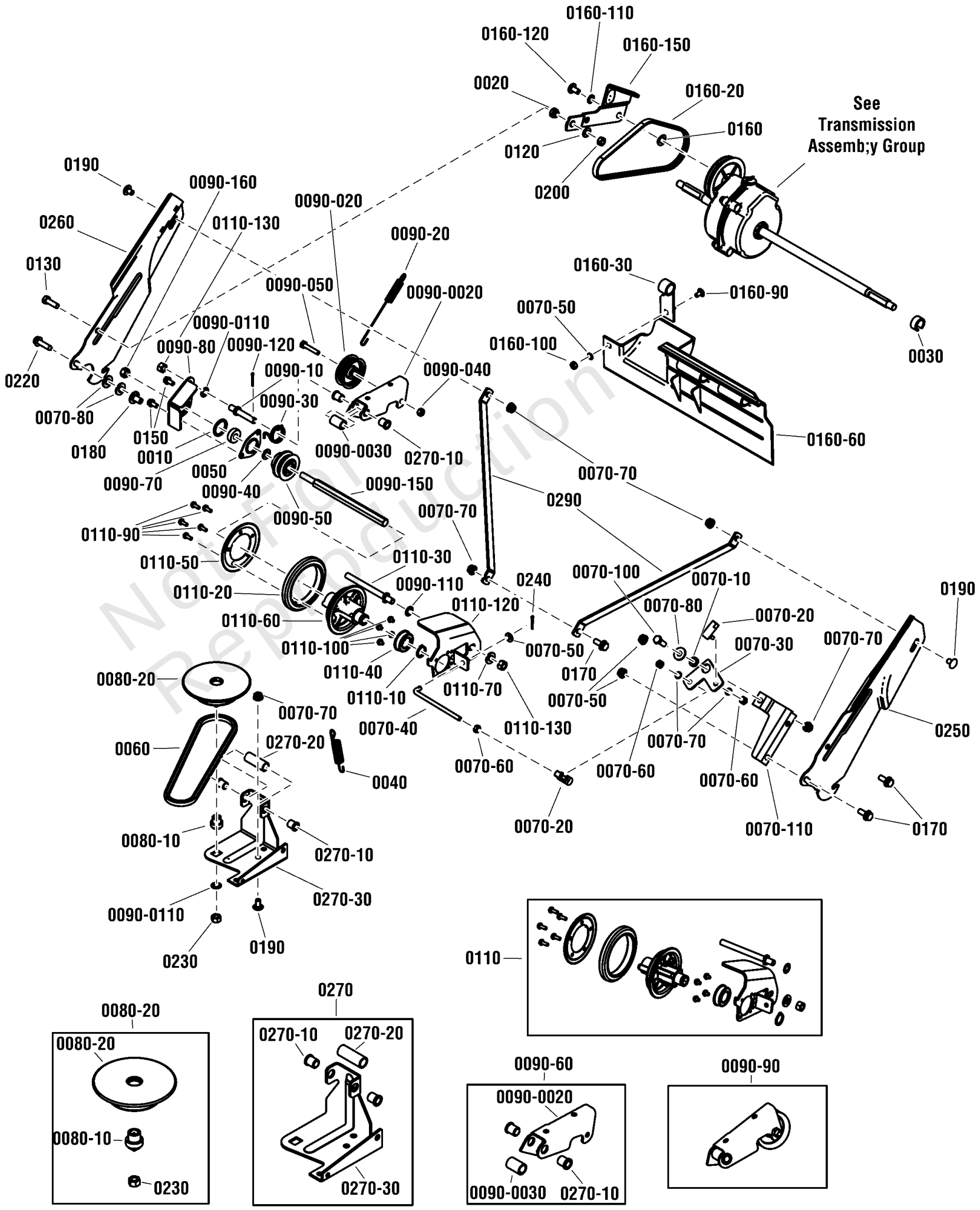

Not for Reproduction

Drive System, Self Propelled

REF NO	PART NO	QTY	DESCRIPTION
0150	704130	2	SCREW, HEX, 1/4-20X.5
0160	703940	1	WASHER, .445IDX.78OD
0160-20	7012354YP	1	BELT, Poly-V, Kevlar, V21
0160-30	7012616YP	1	SUPPORT, Foot Guard
0160-60	7029008YP	1	GUARD, Foot, P21 EURO, Long
0160-90	703978	1	BOLT,1/4-20X0.5
0160-100	703127	1	NUT
0160-110	7090391SM	1	WASHER, Internal Tooth, 5/16
0160-120	1753983YP	1	SCREW, Truss Head
0160-150	7034179BMYP	1	LINK, DIFFERENTIAL
0170	703354	3	SCREW, 5/16-18
0180	703947	1	NUT, 5/16-18 X .625, Weld, ZC/CL
0190	703447	1	BOLT, 5/16-18X.625 G5
0200	703896	1	NUT, HEX, 5/16-24
0220	703167	1	SCREW
0230	703457	1	NUT, HEX,3/8-16, GR5
0240	1501125MA	1	GEAR, 9 Tooth
0250	7033985AYP	1	HANDLE, Lower, ADJ, LH
0260	7033986AYP	1	HANDLE, LOWER, RH
0270	7052987BMYP	1	ASSEMBLY, Deck Bracket, P21S
0270-10	703973	4	BUSHING
0270-20	703941	1	SPACER, .5IDX.64OD
0270-30	7033774YP	1	BRKT, DECK, P21S
0290	7046707BMYP	2	BRACE, HANDLE ECOAT

Not For Reproduction

Copyright © Briggs & Stratton. All Rights reserved

Handle Group

Note: Unless noted otherwise, use the standard torque specifications

Mfg. No: 7800968-00

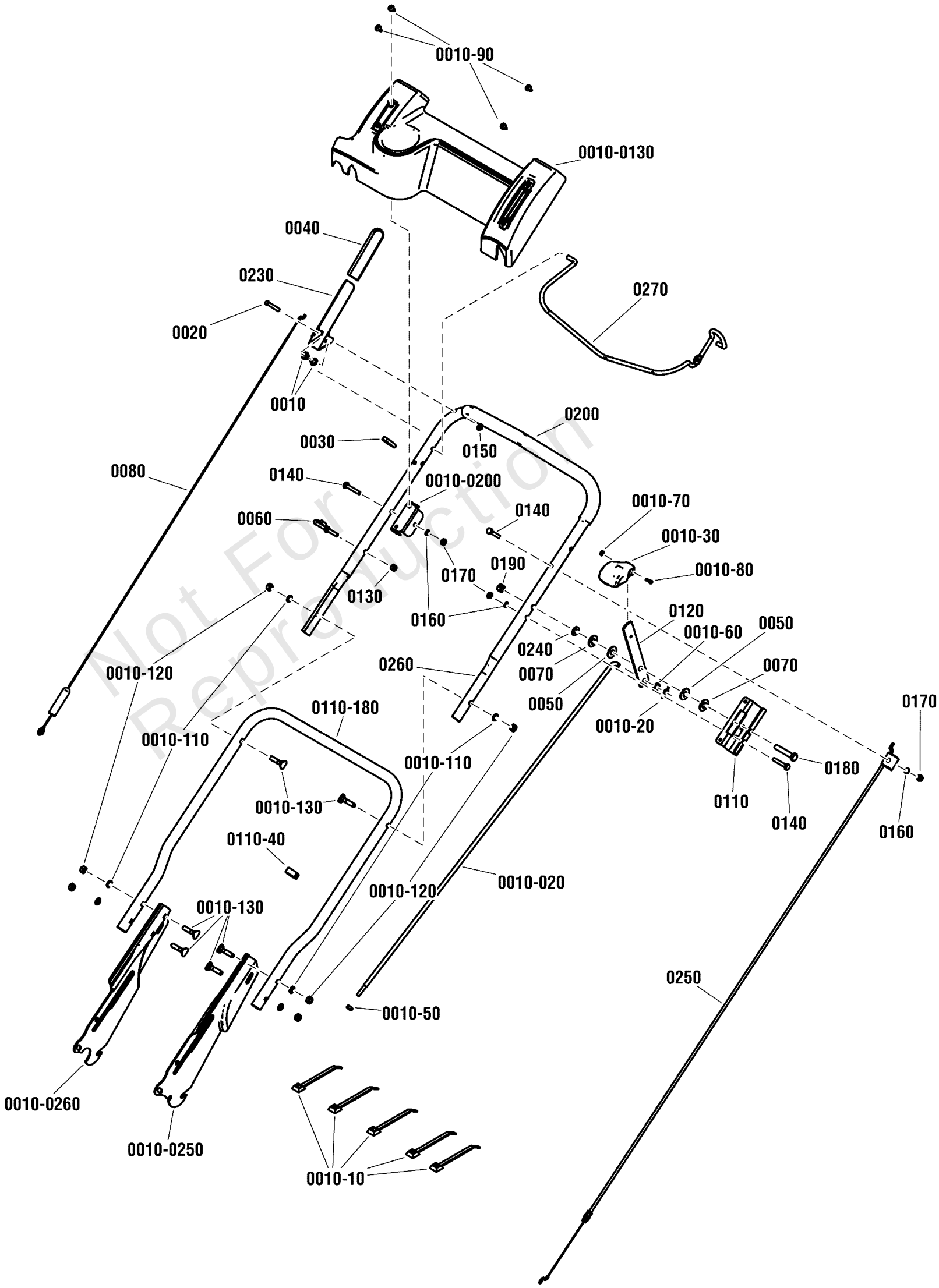

Not For Reproduction

Copyright © Briggs & Stratton. All Rights reserved

Handle Group

REF NO	PART NO	QTY	DESCRIPTION
0010	7014343YP	2	BUSHING, Flanged, .27 ID, Nylon, Black
0010-10	7024641YP	5	WIRE TIE, 5.5” L
0010-20	704030	1	PIN,COTTER,5/16X1.044
0010-30	7075182YP	1	KNOB, Shift, Red
0010-50	703461	1	NUT, 1/4-28 Hex, GR5, Zinc/Clear
0010-60	703350	1	WASHER
0010-70	703460	1	NUT, Hex #8-32
0010-80	703351	1	SCREW, #8-32 X 0.50, Machine Fillister Head, Zinc/Clear
0010-90	703961	4	SCREW, 1/4-20 X .550, T-30 Pan Head Torx, Self-Tap
0010-110	7090391SM	6	WASHER, 5/16, Internal Lock, Zinc/Clear
0010-120	703465	6	NUT, 5/16-18, GRB, Zinc/Clear
0010-130	704063	6	BOLT,HEX,5/16-18X1.5
0010-020	7074133YP	1	ROD, Speed Control (35.5” L, 1/4-28 thread)
0010-0130	7106275YP	1	PANEL, Dash, ES W/O Throttle
0010-0200	7106274BMYP	1	BRACKET, Panel Mount, Black
0010-0250	7033985AYP	1	HANDLE, Lower, ADJ, LH
0010-0260	7033986AYP	1	HANDLE, LOWER, RH
0020	704031	1	PIN, CLEVIS, 1/4X1.5
0030	7026219YP	1	CLAMP, 7/8” Double Cable
0040	7028407YP	1	GRIP, International Symbol, 4.6” Black
0050	704004	2	WASHER,.406IDX1OD
0060	7028488MA	1	GUIDE, 1/4-20, Rope, CL/ZC
0070	703964	2	WASHER, FLAT
0080	7034604YP	1	CABLE, Clutch Control, 41.25” L
0110	7074003YP	1	BRACKET, Shift, Black Zinc
0110-40	7023813SM	1	CLIP, Wiring Harness
0110-180	7106232AYP	1	HANDLE, Middle, Black
0120	7074113YP	1	LEVER, Shift
0130	703232	1	NUT, 1/4-20, NYLOCK
0140	703234	3	CAPSCREW, 1/4-20X1.5
0150	704005	1	PUSHNUT, CAP, 1/4
0160	703462	3	WASHER, LOCK, 1/4
0170	703127	3	NUT
0180	703589	1	CAPSCREW, 3/8-16X2
0190	703347	1	NUT, 3/8-16
0200	7023810YP	1	FOAM GRIP, 18.75”
0230	7074473BMYP	1	HANDLE, CLUTCH
0240	704006	1	WASHER, .393IDX.760OD
0250	7106257YP	1	CABLE, OPC, 50.56” Long, Z Ends, Snap-in, for Over-the-Top Bail
0260	7106258AYP	1	HANDLE
0270	7106255AYP	1	BAIL,OPC,Over-the-Top, Black

Not For Reproduction

Copyright © Briggs & Stratton. All Rights reserved

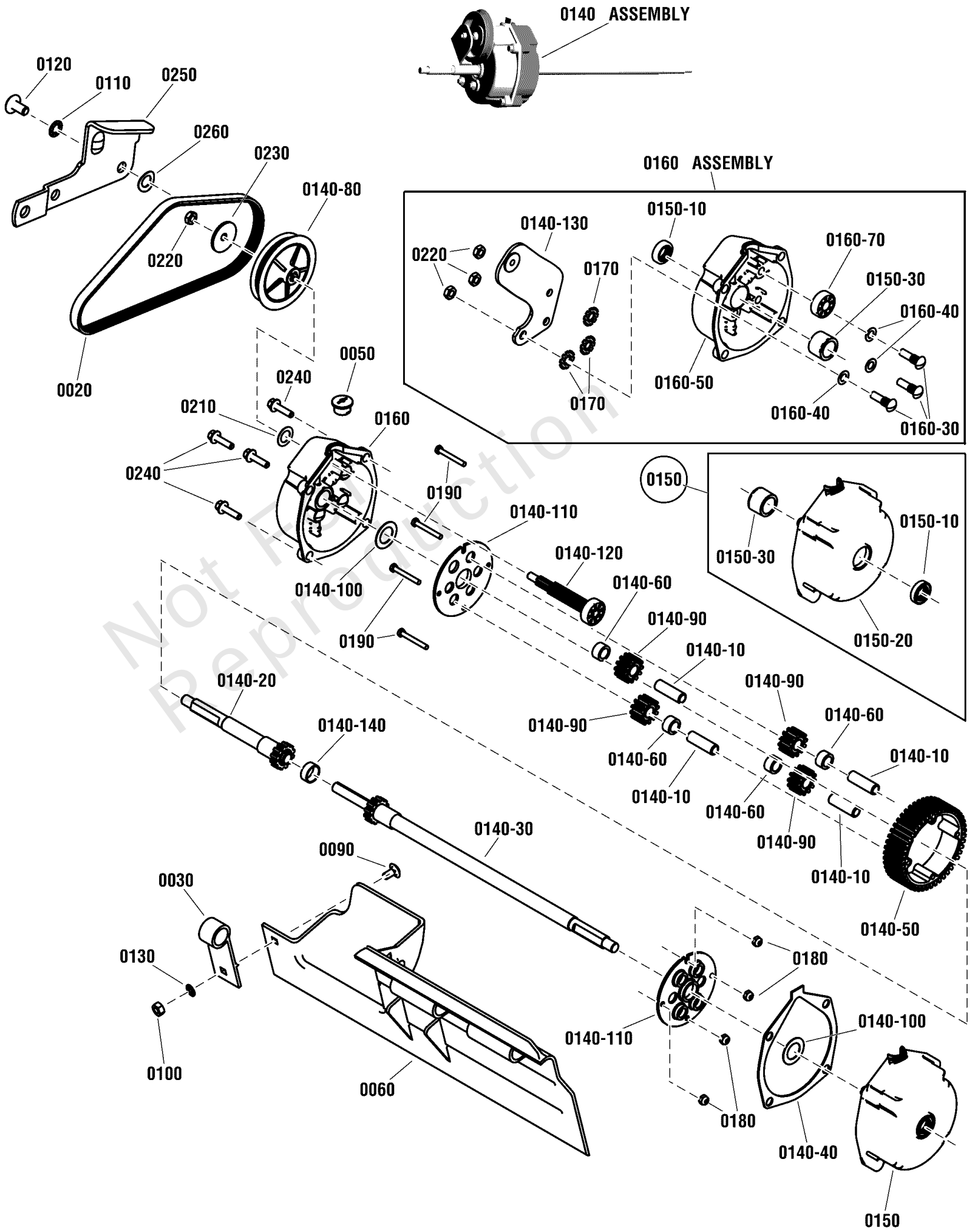

Not For Reproduction

Transmission Assembly

REF NO	PART NO	QTY	DESCRIPTION
0020	7012354YP	1	BELT, Poly-V, V21
0030	7012616YP	1	SUPPORT, Foot Guard
0040	-----		GREASE, Darina 00 (Not Shown, Use 4oz. Max)
0050	703931	1	PLUG, TRANSMISSION
0060	7029008YP	1	GUARD, Foot
0090	703978	1	BOLT,1/4-20X0.5
0100	703127	1	NUT
0110	7090391SM	1	WASHER, 5/16, Internal Lock, Zinc/Clear
0120	1753983YP	1	SCREW, 5/16-18 x 5/8 Truss Head Torx
0130	703462	1	WASHER, LOCK, 1/4
0140	7053943YP	1	ASSEMBLY, Transmission, 21P
0140-10	7011110YP	4	SHAFT, Pinion, .471 OD, 1.5" Long
0140-40	7011774YP	1	GASKET, V21
0140-50	7012495YP	1	GEAR, 46T, V21
0140-60	703933	4	SPACER, .48IDX.70OD
0140-80	7019213YP	1	PULLEY, Poly-V (3.5 O.D.)
0140-90	7021115YP	4	GEAR, Pinion (12 Tooth, .625 Thick)
0140-100	7031965YP	2	WASHER, 1.25 X .765 X .03, Thrust, ZC/CL
0140-110	7031970YP	2	PLATE, Differential Gear, V21
0140-120	7050767YP	1	ASSEMBLY, Input Gear
0140-130	7051903AYP	1	WELDMENT, Differential Bracket
0140-140	703934	1	SPACER, .72IDX.82OD
0140-20	7050830YP	1	ASSEMBLY, Short Axle
0140-30	7050831YP	1	ASSEMBLY, Long Axle
0150	7053939YP	1	ASSEMBLY, Left Housing
0150-10	7012314YP	2	SEAL, 5/8" ID
0150-20	7029033YP	1	HOUSING, Left Hand
0150-30	7029035YP	2	BEARING, Tapered, Differential Housing
0160	7051908YP	1	ASSEMBLY, Housing, Right Hand
0160-30	703935	3	BOLT, 5/16-24X1.125
0160-40	7024442YP	3	GASKET, 5/8" O.D.
0160-50	7029034YP	1	HOUSING, Right Hand
0160-70	7073963YP	1	BEARING, Ball, 1.125 OD, .440 ID, 3.8 Wide
0170	703936	3	WASHER, .325IDX.850OD
0180	703937	4	NUT, NYLOCK, 10-32
0190	703938	4	CAPSCREW, 10-32X1.5
0210	703349	1	WSHR,0.453
0220	703459	4	NUT, HEX, 5/16-24
0230	703939	1	WASHER, .32IDX1.4OD
0240	703833	4	SCREW, 1/4-20 x 1 Hex Washer Self-Tap, ZC/CL
0250	7034179BMYP	1	LINK, DIFFERENTIAL
0260	703940	1	WASHER, .445IDX.78OD

Not For Reproduction

Copyright © Briggs & Stratton. All Rights reserved

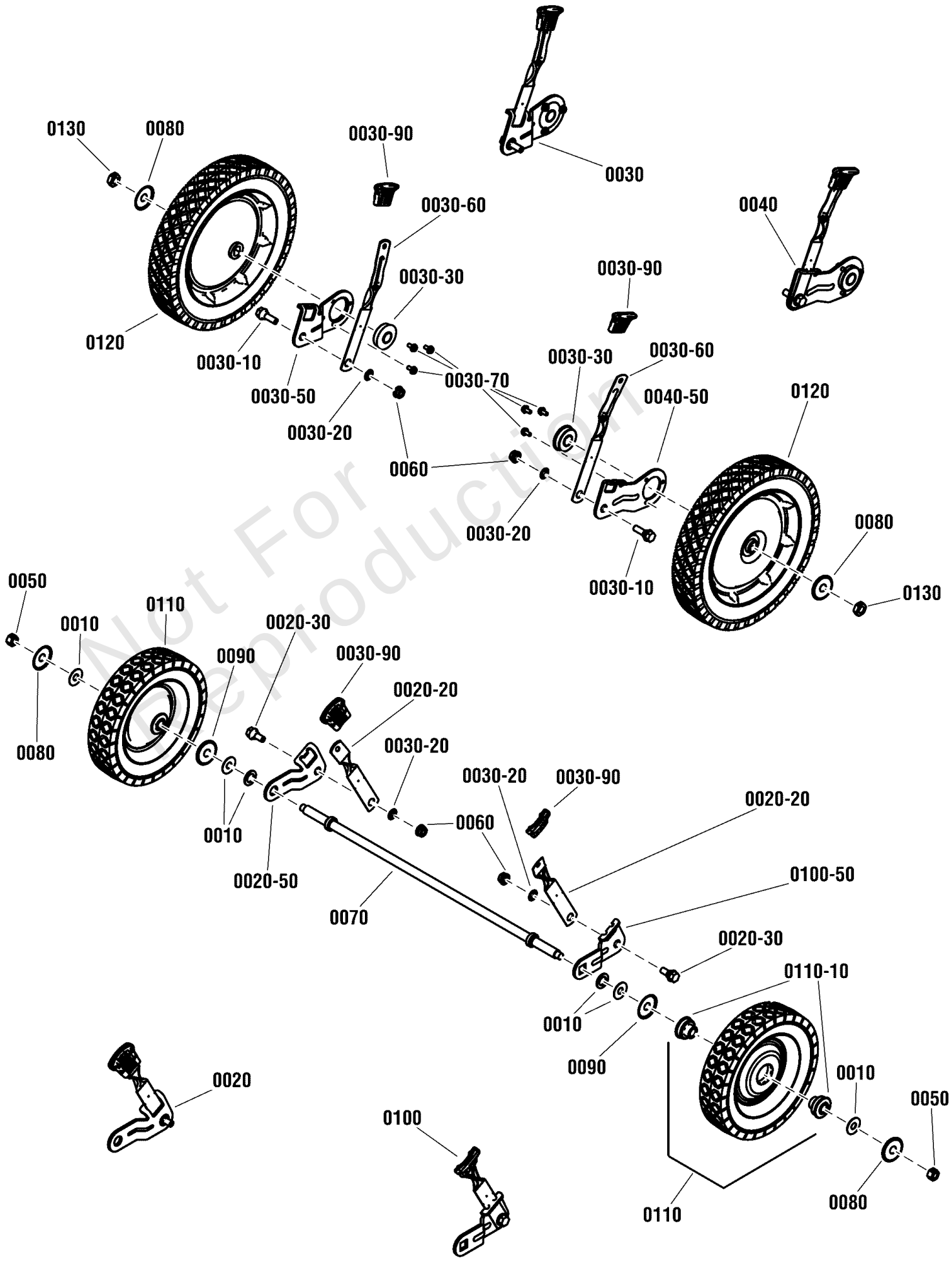

Not For Reproduction

Wheels, Brackets & Latches

REF NO	PART NO	QTY	DESCRIPTION
0010	703964	6	WASHER, FLAT
0020	7600180YP	1	KIT, FRONT WHEEL ARM
0020-20	7012325YP	2	LATCH, Height
0020-30	703839	2	BOLT, 5/16-18X.75
0020-50	7031017YP	1	WHEEL ARM, Front, Round Hole, RH, Clear
0030	7054246YP	1	WHEEL ARM ASMY, RR
0030-10	703840	2	BOLT,SHLDR 5/16-18X1
0030-20	703297	4	RETAINER, GR5, 5/16
0030-30	7012312YP	2	BEARING, 9/16" ID
0030-50	7032722YP	1	WHEEL ARM, REAR RH
0030-60	7035717YP	2	LATCH, Height Adjusting, (long)
0030-70	703967	6	SCREW, #10-32X0.375
0030-90	7103793YP	4	GRIP, HT LATCH, BLACK
0040	7054247YP	1	WHEEL ARM ASMY, LR
0040-50	7032723YP	1	ARM, Wheel, Left Rear, Zinc/Clear
0050	703348	2	NUT,7/16-20
0060	703409	4	NUT, 5/16-18, GR5
0070	7021119YP	1	AXLE, V21
0080	7031960YP	4	HUBCAP
0090	7031121YP	2	HUBCAP, V21
0100	7600179YP	1	KIT, FRONT WHEEL ARM
0100-50	7031016YP	1	WHEEL ARM, L.H. Front (Square Hole)
0110	7035727YP	2	WHEEL, 8 x 1.75 - Steel - D - Gray
0110-10	7011125YP	4	BEARING, 7/16" ID, Ball, Front Wheel
0120	7035726YP	2	WHEEL,(SP)-GRAY
0130	770537	2	NUT, 7/16-20, Hex Flanged Center Lock, ZC/CL

Not For Reproduction

Hardware Identification & Torque Specifications

Torque Specification Chart

FOR STANDARD METRIC MACHINE HARDWARE (Tolerance ± 20%)

Property Class	5.6 Class 5.6		8.8 Class 8.8		10.9 Class 10.9		12.9 Class 12.9	
Size Of Hardware	*in/lbs* **ft/lbs**	Nm.	*in/lbs* **ft/lbs**	Nm.	*in/lbs* **ft/lbs**	Nm.	*in/lbs* **ft/lbs**	Nm.
M3	*5.88*	*.56*	*13.44*	*1.28*	*19.2*	*1.80*	*22.92*	2.15
M4	*13.44*	*1.28*	*30.72*	*2.90*	*43.44*	*4.10*	*52.56*	4.95
M5	*26.4*	*2.50*	*60.96*	*5.75*	**5.97**	*8.10*	**7.15**	9.7
M6	*44.64*	*4.3*	**7.3**	*9.9*	**10.3**	*14*	**12.1**	16.5
M7	**5.2**	*7.1*	**12.1**	*16.5*	**16.9**	*23*	**19.9**	27
M8	**7.7**	*10.5*	**17.7**	*24*	**25**	*34*	**29**	40
M10	**15**	*21*	**35**	*48*	**50**	*67*	**59**	81
M12	**26**	*36*	**61**	*83*	**86.2**	*117*	**103**	140
M14	**42**	*58*	**101**	*132*	**136**	*185*	**162**	220
M16	**64**	*88*	**147**	*200*	**210**	*285*	**250**	340
M18	**89**	*121*	**202**	*275*	**287**	*390*	**346**	470
M20	**126**	*171*	**290**	*390*	**405**	*550*	**486**	660
M22	**169**	*230*	**390**	*530*	**559**	*745*	**656**	890
M24	**217**	*295*	**497**	*375*	**708**	*960*	**840**	1140
M27	**320**	*435*	**733**	*995*	**1032**	*1400*	**1239**	1680
M30	**435**	*590*	**995**	*1350*	**1401**	*1900*	**1681**	2280
M33	**590**	*800*	**1349**	*1830*	**1902**	*2580*	**2278**	3090
M36	**759**	*1030*	**1740**	*2360*	**2441**	*3310*	**2935**	3980
M39	**988**	*1340*	**2249**	*3050*	**3163**	*4290*	**3798**	5150

The guides and ruler furnished below are designed to help you select the appropriate hardware.

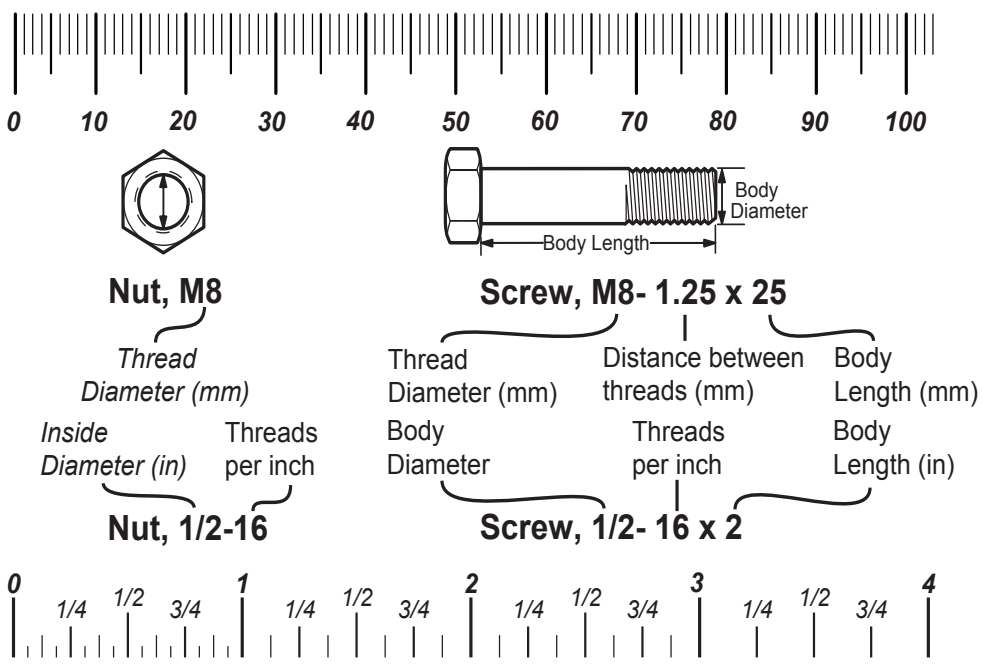

Standard Hardware Sizing

When a washer or nut is identified as **1/2"** (M8), this is the *Nominal size*, meaning the *inside diameter* is 1/2 inch (8mm metric thread diameter); if a second number is present it represents the *threads per inch* (distance between threads).

When bolt or capscrew is identified as **1/2 - 16 x 2"** (M8 - 1.25 x 50), this means the *Nominal size*, or body diameter is 1/2 inch (8mm metric thread diameter), the second number,16, represents the *threads per inch, (distance between threads).* The final number is the body length of the bolt or screw, 2 inches (50mm).

Torque Specification Chart

FOR STANDARD MACHINE HARDWARE (Tolerance ± 20%)

Hardware Grade	No Marks SAE Grade 2		SAE Grade 5		SAE Grade 8	
Size Of Hardware	*in/lbs* **ft/lbs**	Nm.	*in/lbs* **ft/lbs**	Nm.	*in/lbs* **ft/lbs**	Nm.
8-32	*19*	2.1	*30*	3.4	*41*	4.6
8-36	*20*	2.3	*31*	3.5	*43*	4.9
10-24	*27*	3.1	*43*	4.9	*60*	6.8
10-32	*31*	3.5	*49*	5.5	*68*	7.7
1/4-20	*66*	7.6	**8**	10.9	**12**	16.3
1/4-28	*76*	8.6	**10**	13.6	**14**	19.0
5/16-18	**11**	15.0	**17**	23.1	**25**	34.0
5/16-24	**12**	16.3	**19**	25.8	**29**	34.0
3/8-16	**20**	27.2	**30**	40.8	**45**	61.2
3/8-24	**23**	31.3	**35**	47.6	**50**	68.0
7/16-14	**30**	40.8	**50**	68.0	**70**	95.2
7/16-20	**35**	47.6	**55**	74.8	**80**	108.8
1/2-13	**50**	68.0	**75**	102.0	**110**	149.6
1/2-20	**55**	74.8	**90**	122.4	**120**	163.2
9/16-12	**65**	88.4	**110**	149.6	**150**	204.0
9/16-18	**75**	102.0	**120**	163.2	**170**	231.2
5/8-11	**90**	122.4	**150**	204.0	**220**	299.2
5/8-18	**100**	136	**180**	244.8	**240**	326.4
3/4-10	**160**	217.6	**260**	353.6	**386**	525.0
3/4-16	**180**	244.8	**300**	408.0	**420**	571.2
7/8-9	**140**	190.4	**400**	544.0	**600**	816.0
7/8-14	**155**	210.8	**440**	598.4	**660**	897.6
1-8	**220**	299.2	**580**	788.8	**900**	1,244.0
1-12	**240**	326.4	**640**	870.4	**1,000**	1,360.0

NOTES

1. These torque values are to be used for all hardware excluding: locknuts, self-tapping screws, thread forming screws, sheet metal screws and socket head setscrews.
2. Recommended seating torque values for locknuts:
   a. for prevailing torque locknuts - use 65% of grade 5 torques.
   b. for flange whizlock nuts and screws - use 135% of grade 5 torques.
3. Unless otherwise noted on assembly drawings, all torque values must meet this specification.

Common Hardware Types

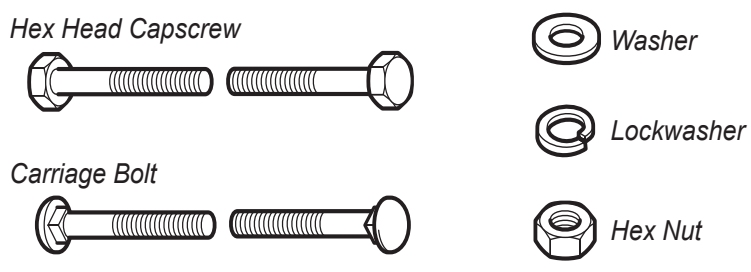

Wrench & Fastener Size Guide

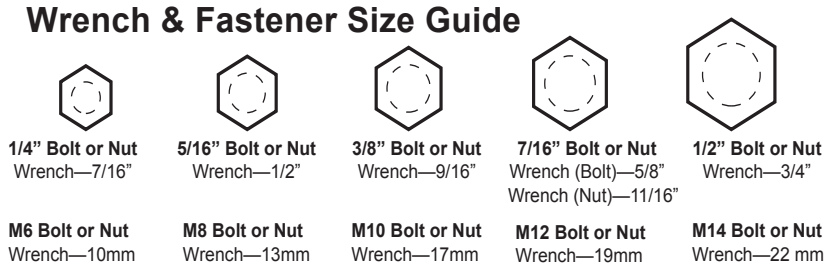

Copyright © Briggs & Stratton. All Rights reserved