Parts Manual

Mfg. No: 2691663-02

SPX2542, 42" Fabricated 25 HP SPX Lawn Tractor 150 Series

Copyright © Briggs & Stratton. All Rights reserved

1691319SM - Suitcase Weights, 33Lbs. . . . . .
1690555SM - Weight, Rear Wheel (1 Each). . . . . .
1694921 - Snow Cab, Soft Side. . . . . .
1694922SM - Weight Carrier, Rear. . . . . .
1696092 - Dozer Blade, 42". . . . . .
1696423-00 - Snowthrower, Single Stage, 42". . . . . .
1696915-00 - Grass Mulcher Kit, 42" Fabricated Mower Deck. . . . . .
1696915-01 - Grass Mulcher Kit, 42" Fabricated Mower Deck. . . . . .
1696092A-00 - Dozer Blade, 42". . . . . .
1696915-02 - Grass Mulcher Kit, 42" Fabricated Mower Deck. . . . . .
1697373A-00 - Bagging Boot, Blade & Baffle, 42". . . . . .
1697358A-00 - Catcher, Clean Sweep, Twin. . . . . .

Not For Reproduction

Copyright © Briggs & Stratton. All Rights reserved

Model Components — Page

42" (107cm) Mower Deck - Clutch Group. . . . 4
42" (107cm) Mower Deck - Height Adjustment & Roller Bar Group. . . . 6
42" (107cm) Mower Deck - Housing, Arbor & Blade Group. . . . 8
Controls Group. . . . 10
Decals Group. . . . 12
Decals Group. . . . 14
Electrical Group. . . . 16
Electrical Schematic -. . . . 20
Electrical Schematic - Charging Circuit. . . . 22
Electrical Schematic - Cranking Circuit. . . . 24
Electrical Schematic - Headlight Circuit. . . . 26
Electrical Schematic - Height of Cut. . . . 28
Electrical Schematic - Hour Meter. . . . 30
Electrical Schematic - Ignition Shutdown. . . . 32
Electrical Schematic - PTO Clutch Circuit. . . . 34
Engine Group. . . . 36
Frame & Front Axle Group. . . . 38
Front Axle Group. . . . 40
Hood, Grille & Dash Group. . . . 42
Lift Group - Manual. . . . 44
Seat Deck & Fuel Tank Group. . . . 46
Seat Group. . . . 48
Steering Group. . . . 50
Transmission Group. . . . 52
Transmission SERVICE PARTS - Tuff Torq K46BP (1729588). . . . 54
Wheels & Tires. . . . 58
Torque Specification Chart. . . . 60

Not For Reproduction

Copyright © Briggs & Stratton. All Rights reserved

42" (107cm) Mower Deck - Clutch Group

Note: Unless noted otherwise, use the standard torque specifications

Mfg. No: 2691663-02

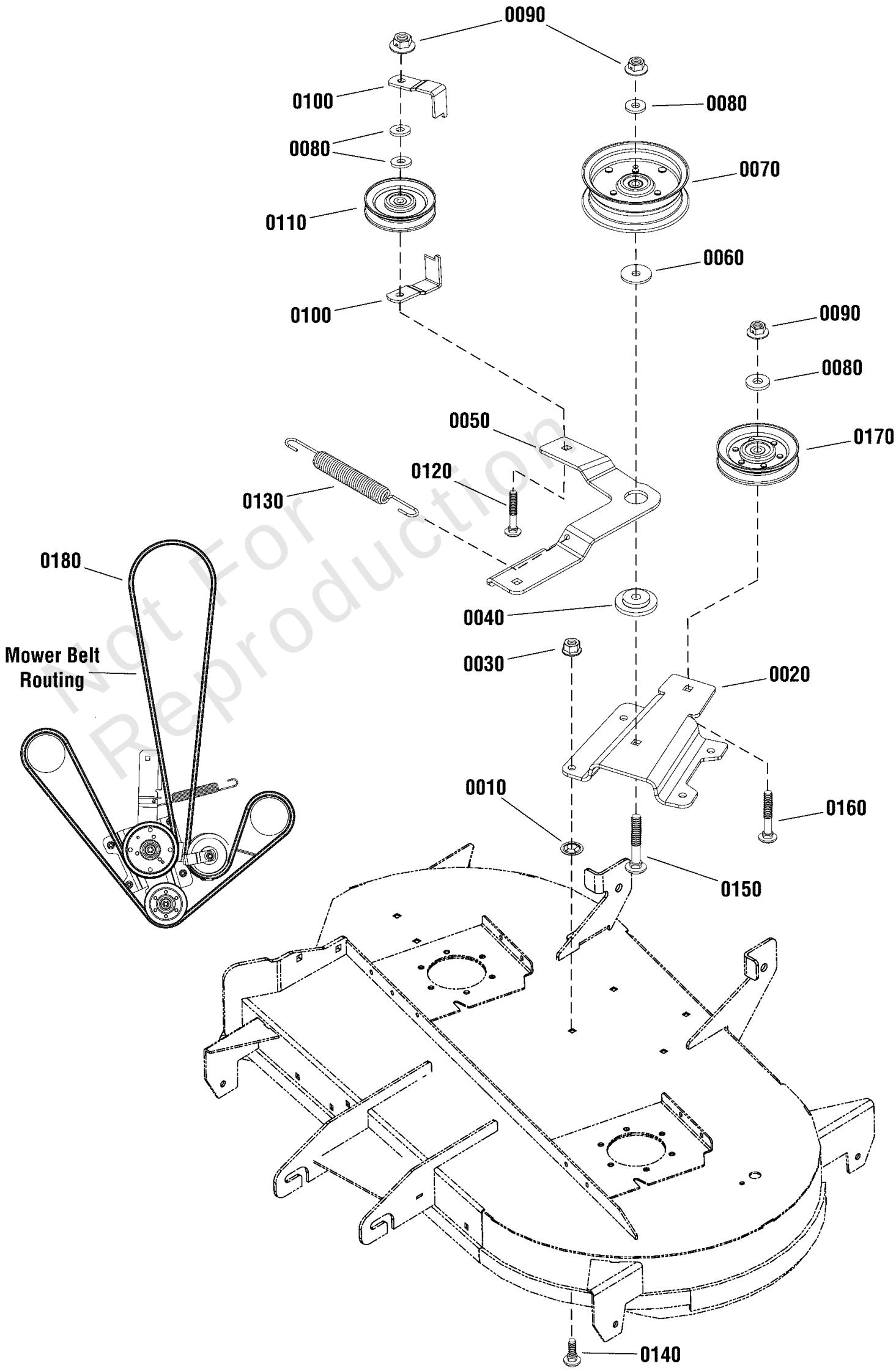

Not For Reproduction

Copyright © Briggs & Stratton. All Rights reserved

42" (107cm) Mower Deck - Clutch Group

REF NO	PART NO	QTY	DESCRIPTION
0010	703297	4	RETAINER, GR5, 5/16
0020	1758542BMYP	1	BRACKET, Idler
0030	703115	4	NUT
0040	706128	1	SPACER, IDLER
0050	1759359BMYP	1	ARM, Idler
0060	703591	1	WASHER, .406X1.5X.12
0070	1757894YP	1	PULLEY, Flat Idler, 4.5”
0080	704128	4	WASHER
0090	1960339SM	3	NUT, Hex Flange, 3/8-16
0100	706131	2	GUARD, Spring
0110	7018574SM	1	IDLER, Flat, 4 1/8
0120	7900009SM	1	RHSSNB, 3/8-16 X 2-1/
0130	1734316SM	1	SPRING, Extension, 7.88 LG
0140	703225	4	BOLT
0150	1960615SM	1	BOLT-RD HD SQ NK 3/8
0160	703858	1	BOLT, 3/8-16X1.75
0170	885937YP	1	PULLEY, Idler 4.00
0180	1758984YP	1	BELT, Aramid

Not For Reproduction

Copyright © Briggs & Stratton. All Rights reserved

42" (107cm) Mower Deck - Height Adjustment & Roller Bar Group

Note: Unless noted otherwise, use the standard torque specifications

Mfg. No: 2691663-02

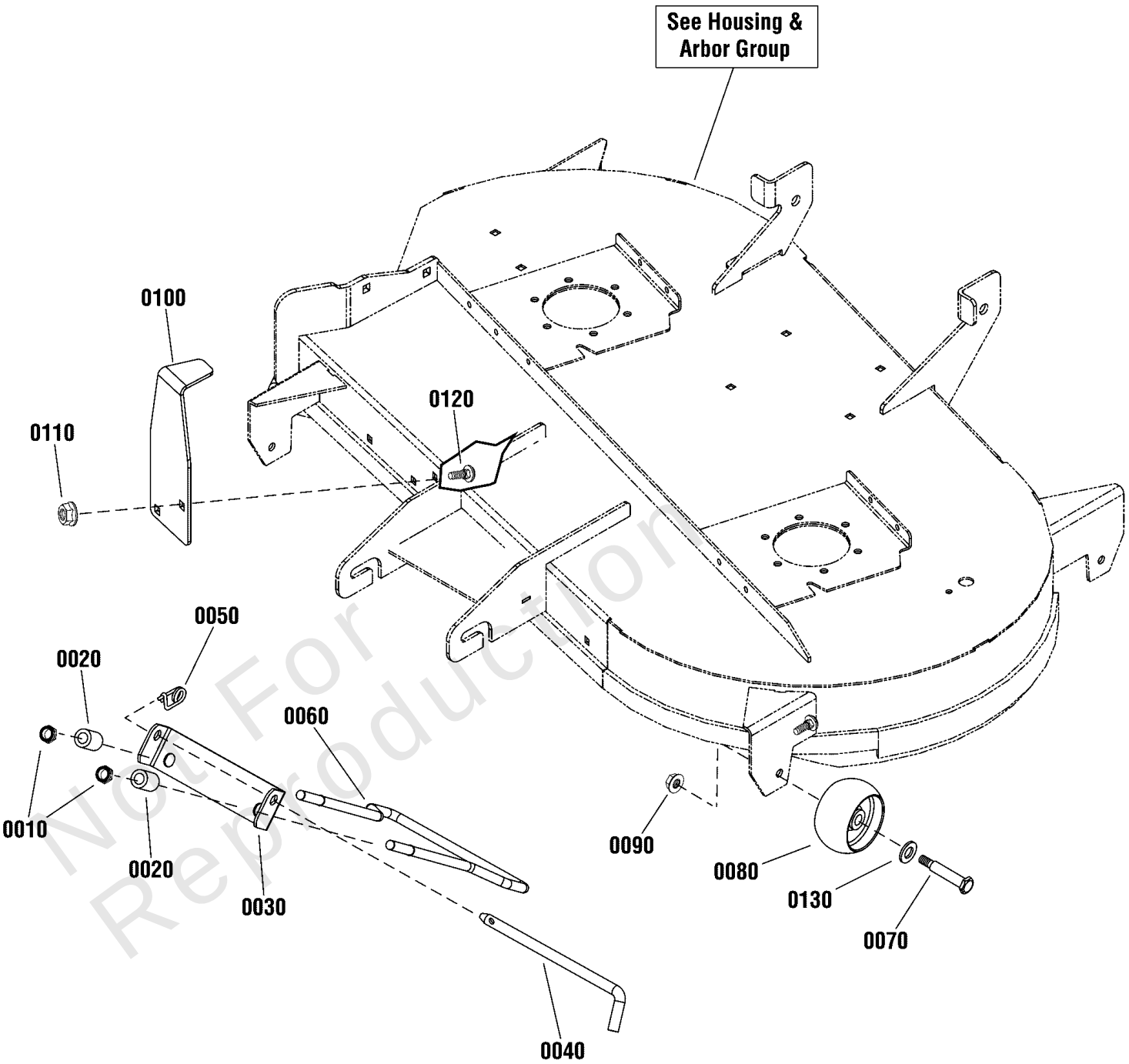

Not For Reproduction

Copyright © Briggs & Stratton. All Rights reserved

42" (107cm) Mower Deck - Height Adjustment & Roller Bar Group

REF NO	PART NO	QTY	DESCRIPTION
0010	1960379SM	2	NUT, Hex Lock, 1/2-13
0020	1679166SM	2	SPACER, 1/2 x 7/8 x 1 3/16
0030	1730221ASM	1	HANGER, Front
0040	1731414SM	1	ROD, Latch
0050	703852	1	PIN, 5/16 X 0.375
0060	1730097SM	1	ROD, Bail
0070	2108765SM	4	BOLT-WHEEL 3/8-16X2.7
0080	1714760SM	4	GAUGE WHEEL
0090	703158	4	NUT, Hex Flange, ESNA, 3/8-16
0100	1758555BMYP	1	UPSTOP
0110	703409	2	NUT, 5/16-18, GR5
0120	703185	2	BOLT, Round Head, Short Square Neck
0130	703853	4	WASHER, 0.516IDX1OD

Not For Reproduction

Copyright © Briggs & Stratton. All Rights reserved

42" (107cm) Mower Deck - Housing, Arbor & Blade Group

Note: Unless noted otherwise, use the standard torque specifications

Mfg. No: 2691663-02

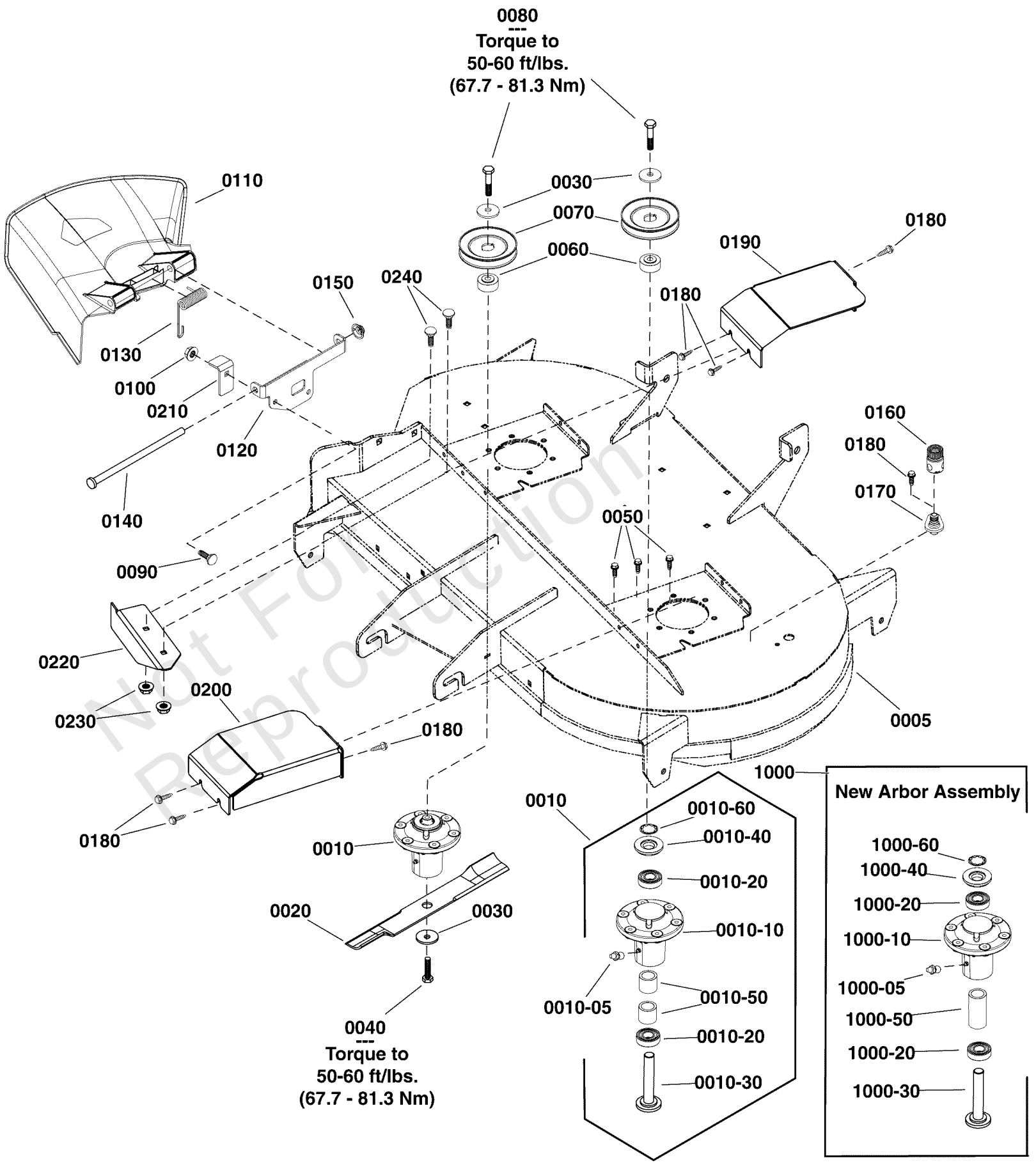

Not For Reproduction

Copyright © Briggs & Stratton. All Rights reserved

42" (107cm) Mower Deck - Housing, Arbor & Blade Group

REF NO	PART NO	QTY	DESCRIPTION
0005	1687949	1	KIT-MOWER DECK
0010	84001645	2	ARBOR ASSEMBLY -(Replaced by Ref. Nos. 1000, this arbor assembly is an exact replacement)
0010-05	1704314SM	1	LUBE FITTING, .250 DR
0010-10	1755437YP	1	HOUSING, w/Lube Fitting
0010-20	1735399YP	2	BEARING, Ball, 20mm
0010-30	1760276YP	1	SHAFT-SPINDLE -(Replaced by Ref. Nos. 1000-30, this spindle shaft is an exact replacement)
0010-40	1735323YP	2	SHIELD, Arbor
0010-50	1735328YP	2	SPACER, Bearing -(Replaced by Ref. Nos. 1000-50, this spacer is an exact replacement)
0010-60	1960766YP	1	RING, SELF LOCKING
1000	84003173	2	ARBOR ASSEMBLY
1000-05	1704314SM	1	LUBE FITTING, .250 DR
1000-10	84003653	1	HOUSING ASSEMBLY
1000-20	1735399YP	2	BEARING, Ball, 20mm
1000-30	84003170	1	SHAFT, SPINDLE
1000-40	84003166	1	COVER, ARBOR
1000-50	84003167	1	SPACER, BEARING
1000-60	1960766YP	1	RING, SELF LOCKING
0020	1758878BMYP	2	BLADE, 21.31" Long
0030	1656916SM	4	WASHER, SPRING 0.475I
0040	1920676SM	2	CAPSCREW, Hex Head, 7/16-14 X 1
0050	704146	12	SCREW, HEX, 5/16-18X1
0060	1736445YP	2	SPACER, Pulley
0070	1737835YP	2	PULLEY, 4.50
0080	705424	2	CAPSCREW, Hex Head, 7/16-14 X 1 3/4
0090	703815	2	BOLT, RD SQ 3/8-16X1
0100	703793	2	LOCKNUT
0110	7104733YP	1	CHUTE, SIDE DISCHARGE
0120	1758982BMYP	1	BRACKET, Deflector
0130	7035813SM	1	SPRING, TORSION, SIDE
0140	7104640YP	1	ROD, Deflector
0150	703179	1	PUSHNUT, CAP TYPE
0160	1756246YP	1	CONNECTOR, Washout Port
0170	1756247YP	1	ADAPTER, Washout Port
0180	703235	7	SCREW, 5/16-18 X 3/4
0190	1758991BMYP	1	COVER, Pulley, RH
0200	1758992BMYP	1	COVER, Pulley, LH
0210	1758593BMYP	1	PROP, DEFLECTOR
0220	1758581BMYP	1	BAFFLE, Pinchoff
0230	703115	2	NUT
0240	703225	2	BOLT

Not For Reproduction

Copyright © Briggs & Stratton. All Rights reserved

Controls Group

Note: Unless noted otherwise, use the standard torque specifications

Mfg. No: 2691663-02

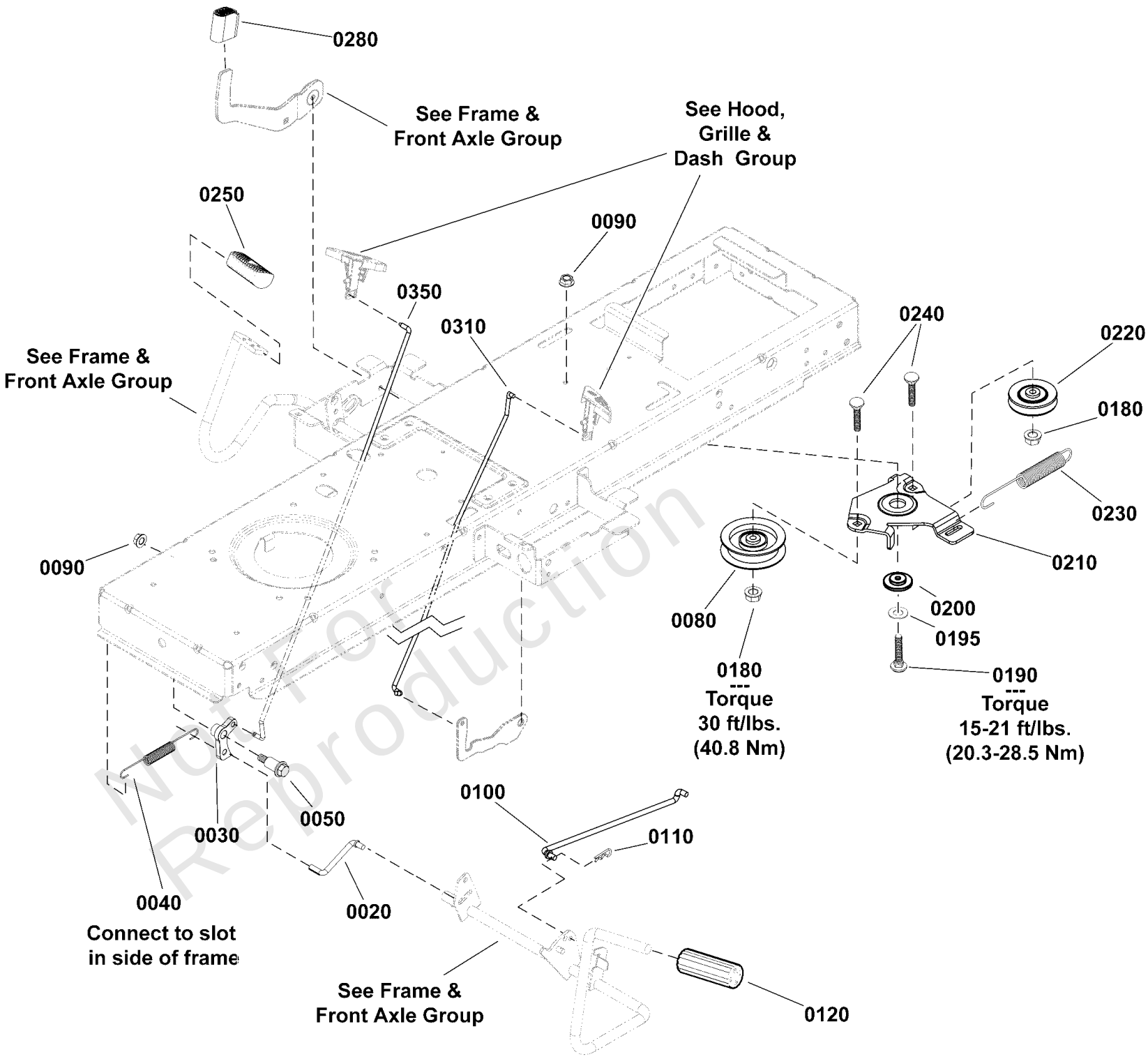

Not For Reproduction

Copyright © Briggs & Stratton. All Rights reserved

Controls Group

REF NO	PART NO	QTY	DESCRIPTION
0020	1727899SM	1	ROD, Cruise Latch, 5/16 Dia. x 2-13/16 Long
0030	1727897SM	1	LATCH, Cruise
0040	2159181SM	1	SPRING, Extension, 9/16 OD x 7-3/4
0050	1728976SM	1	BOLT, Shoulder, 5/16-18 x 1-5/8
0080	1728000SM	1	PULLEY, Idler, 3-1/8 OD, 3/8 ID
0090	703115	2	NUT
0100	1727254SM	1	ROD, Brake Return, 5/16 Dia. x 12-5/8 Long
0110	1722460SM	1	PIN, Quick, 1-3/16 Long
0120	1727261SM	1	PEDAL-BRAKE BLACK RUB
0180	1960687SM	2	NUT, Hex Flange, ESNA, 3/8-16
0190	703570	1	CAPSCREW, Hex Head, 5/16-18 x 1 1/4
0195	1919326SM	1	WASHER, 5/16
0200	1727935SM	1	SPACER-PIVOT 0.330ID
0210	1727894ASM	1	BRACKET, Idler
0220	1728001SM	1	PULLEY, 3 OD, 3/8 ID
0230	1729620SM	1	SPRING, Extension, 1 OD x 7-1/2
0240	1931352SM	2	BOLT, Carriage, Short Neck, 3/8-16 x 1-1/2
0250	1721675SM	1	PAD, Foot Pedal, Forward
0280	1727259SM	1	PAD, Foot Pedal, Reverse
0310	1739876YP	1	ROD, Parking Brake, 1/4 Dia. x 16-3/8 Long
0350	1739877YP	1	ROD, Cruise Latch, 1/4 Dia. x 17

Not For Reproduction

Copyright © Briggs & Stratton. All Rights reserved

Decals Group

Note: Unless noted otherwise, use the standard torque specifications

Mfg. No: 2691663-02

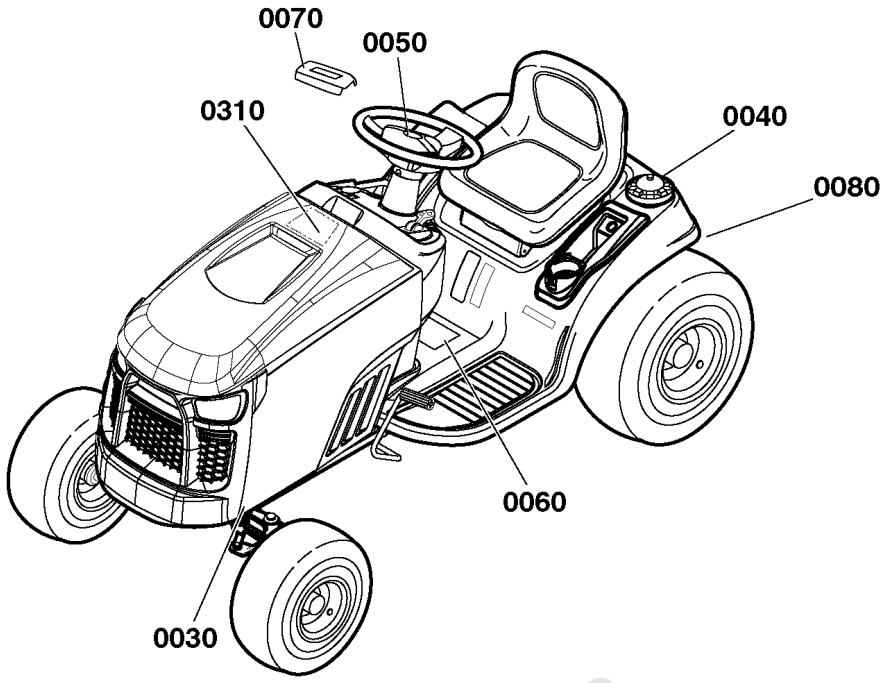

0030

0040

0050

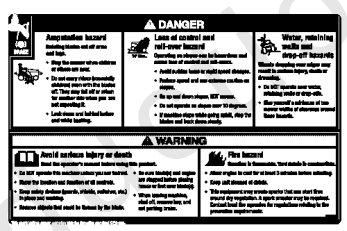

0060

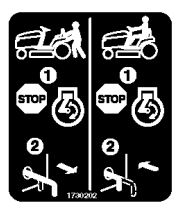

0080

0310

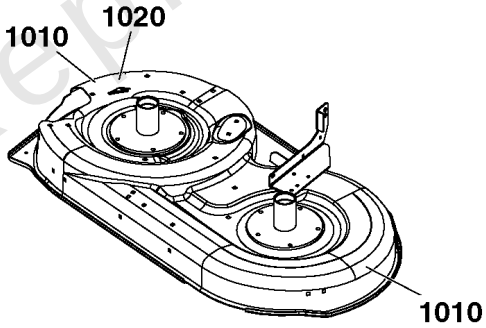

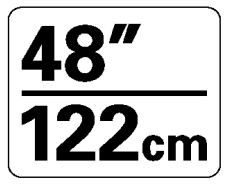

1010

1020

Not For Reproduction

Copyright © Briggs & Stratton. All Rights reserved

Decals Group

REF NO	PART NO	QTY	DESCRIPTION
0030	7104875YP	2	DECAL, Front Cover, SPX Series
0040	1750913YP	1	DECAL, SNAPPER LOGO
0050	84002249	1	DECAL, Snapper Logo, 3.1" X .8"
0060	1755395YP	1	DECAL, Tunnel
0070	84002250	1	CAP, Steering Wheel
0080	1730202SM	1	DECAL, Transmission Tow / Release Lever
0310	1761757YP	1	DECAL, Service
1010	1755719YP	1	DECAL, 48"/122cm
1020	7101665YP	2	DECAL, DANGER

Not For Reproduction

Copyright © Briggs & Stratton. All Rights reserved

Decals Group

Note: Unless noted otherwise, use the standard torque specifications

Mfg. No: 2691663-02

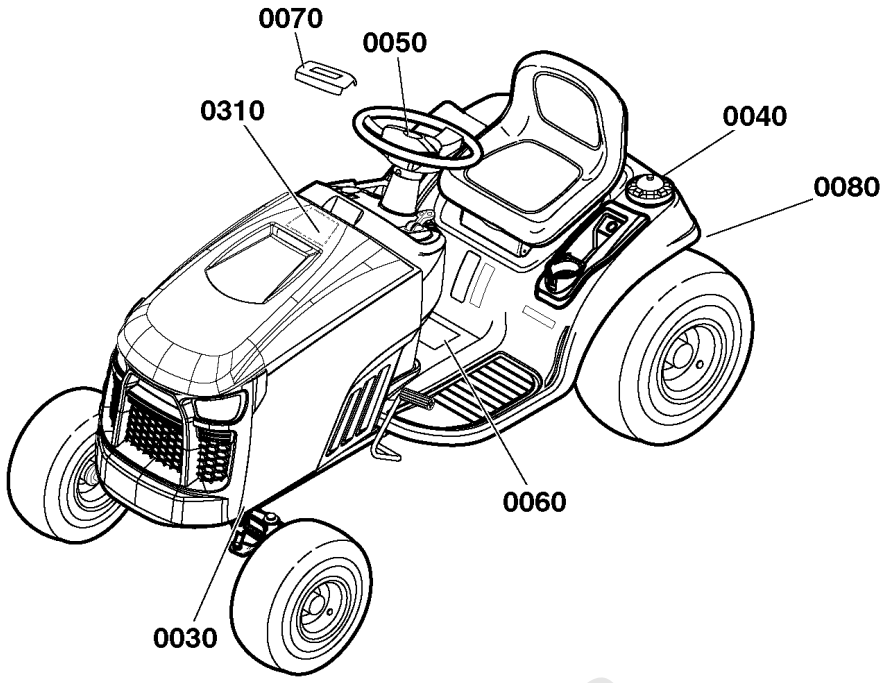

0050

0030

0040

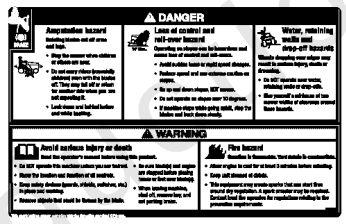

0060

0080

0310

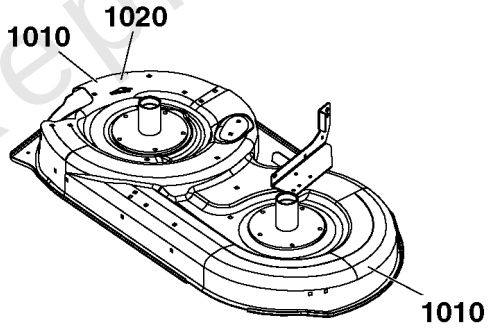

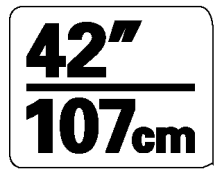

1010

1020

Not For Reproduction

Copyright © Briggs & Stratton. All Rights reserved

Decals Group

REF NO	PART NO	QTY	DESCRIPTION
0030	7104875YP	2	DECAL, Front Cover, SPX Series
0040	1750913YP	1	DECAL, SNAPPER LOGO
0050	84002249	1	DECAL, Snapper Logo, 3.1" X .8"
0060	1755395YP	1	DECAL, Tunnel
0070	84002250	1	CAP, Steering Wheel
0080	1730202SM	1	DECAL, Transmission Tow / Release Lever
0310	1761757YP	1	DECAL, Service
1010	1755716YP	1	DECAL, 42"/107cm
1020	7101665YP	2	DECAL, DANGER

Not For Reproduction

Copyright © Briggs & Stratton. All Rights reserved

Electrical Group

Note: Unless noted otherwise, use the standard torque specifications

Mfg. No: 2691663-02

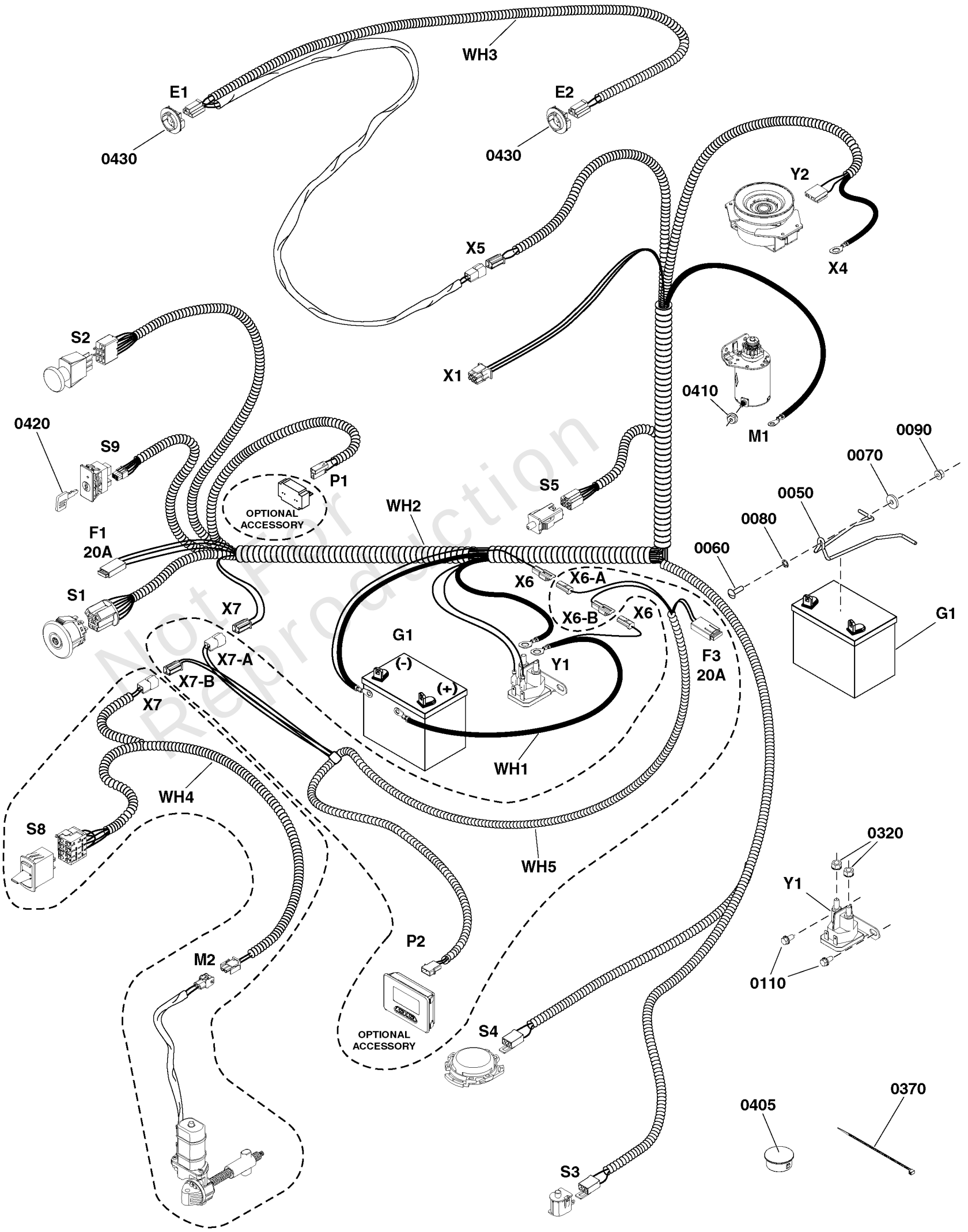

Not For Reproduction

Electrical Group

REF NO	PART NO	QTY	DESCRIPTION
E1	-----	1	HEADLIGHT, Left
E2	-----	1	HEADLIGHT, Right
F1	1731957SM	1	FUSE, Wiring Harness
F3	1731957SM	1	FUSE, Wiring Harness
G1	-----	1	BATTERY, 12 Volt, 230 CCA
M1	592599	1	MOTOR, Starter
M2	1761788YP	1	MOTOR, Electric -(Optional Accessory)
P1	1731185SM	1	METER-HOUR DIGITAL NO -(Optional Accessory)
P2	1758654YP	1	DISPLAY, Mini Meter -(Optional Accessory)
S1	1761507YP	1	SWITCH, Ignition
S2	1722887YP	1	SWITCH, PTO Push/Pull, Yel Knob w/Symbols, 8 Terminal
S3	1720411SM	1	SWITCH, NO, Black, Push Button W/Boot -(Reverse Switch)
S4	1714771SM	1	SWITCH, Seat, Gray Switch, Gray Retainer
S5	7022886YP	1	SWITCH, DP NO/NC SNAP -(Brake Pedal Switch)
S8	1761475YP	1	SWITCH, Height of Cut -(Optional Accessory)
S9	1761897YP	1	SWITCH, Reverse Mow Option
WH1	1759779YP	1	HARNESS, Battery, Solenoid
WH2	1761300YP	1	HARNESS, Main
WH3	1761298YP	1	HARNESS, Headlight
WH4	1761347YP	1	HARNESS, Height of Cut -(Optional Accessory)
WH5	84003001	1	HARNESS, Mini Meter with Height of Cut Harness -(Optional Accessory)
X1	-----	1	CONNECTOR, Engine
X4	-----	1	CHASSIS GROUND POINT
X5	-----	1	CONNECTOR, Main Harness to Headlight Harness
X6	-----	1	CONNECTOR, Battery Solenoid Harness to Main Harness
X6-A	-----	1	CONNECTOR, Mini Meter with Height of Cut Harness to Main Harness
X6-B	-----	1	CONNECTOR, Mini Meter with Height of Cut Harness to Battery Solenoid Harness
X7	-----	1	CONNECTOR, Main Harness to Height of Cut Harness
X7-A	-----	1	CONNECTOR, Mini Meter with Height of Cut Harness to Main Harness
X7-B	-----	1	CONNECTOR, Mini Meter with Height of Cut Harness to Height of Cut Harness
Y1	1755381YP	1	SOLENOID, L-BRACKET -(Starter Solenoid)
Y2	1760986YP	1	OGURA CLUTCH -(PTO Clutch)
0050	1730007SM	1	HOLD DOWN, Battery, 1/4 Dia.
0060	1931318SM	1	BOLT, Carriage, Short Neck, 1/4-20 x 7/8 G5
0070	703229	1	WASHER, 1/4
0080	703826	1	BOLT, PUSHNUT 1/4
0090	703463	1	NUT, GR5,1/4-20
0110	704130	2	SCREW, HEX, 1/4-20X.5
0320	2860750SM	2	NUT-HEX KEPS 5/16-24
0370	703586	3	TIE, SELF LOCKING
0405	1732007SM	1	PLUG, Hole, 7/8 Dia.
0410	703061	1	NUT, HEX KEPS, 1/4-20
0420	1726557SM	2	KEY, No Mow Module (Yellow)

Not For Reproduction

Copyright © Briggs & Stratton. All Rights reserved

Electrical Group

Note: Unless noted otherwise, use the standard torque specifications

Mfg. No: 2691663-02

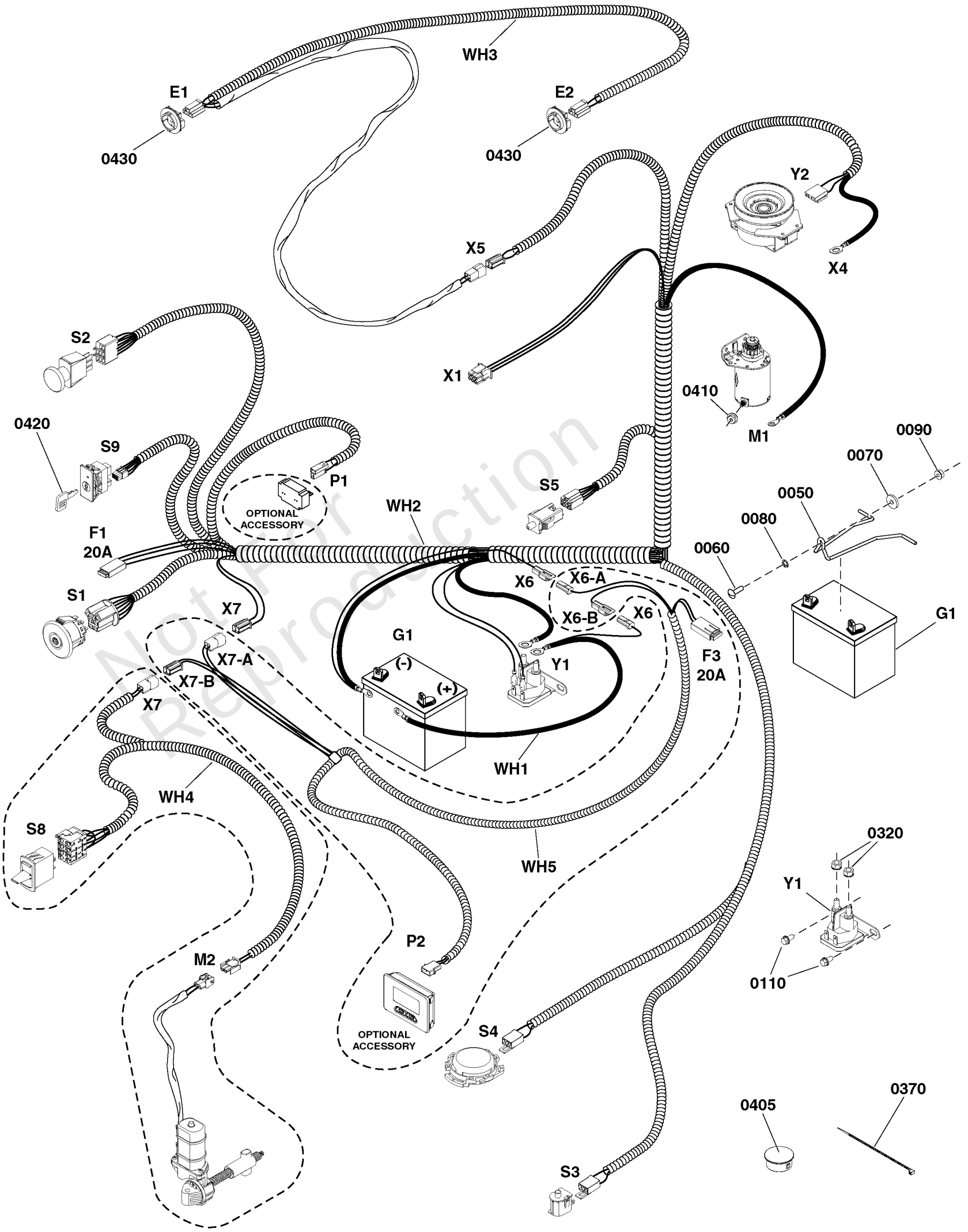

Not For Reproduction

Electrical Group

REF NO	PART NO	QTY	DESCRIPTION
0430	1760239YP	2	LED HEADLIGHT AND SOCKET ASSEMBLY

Not For Reproduction

Copyright © Briggs & Stratton. All Rights reserved

Electrical Schematic -

Note: Unless noted otherwise, use the standard torque specifications

Mfg. No: 2691663-02

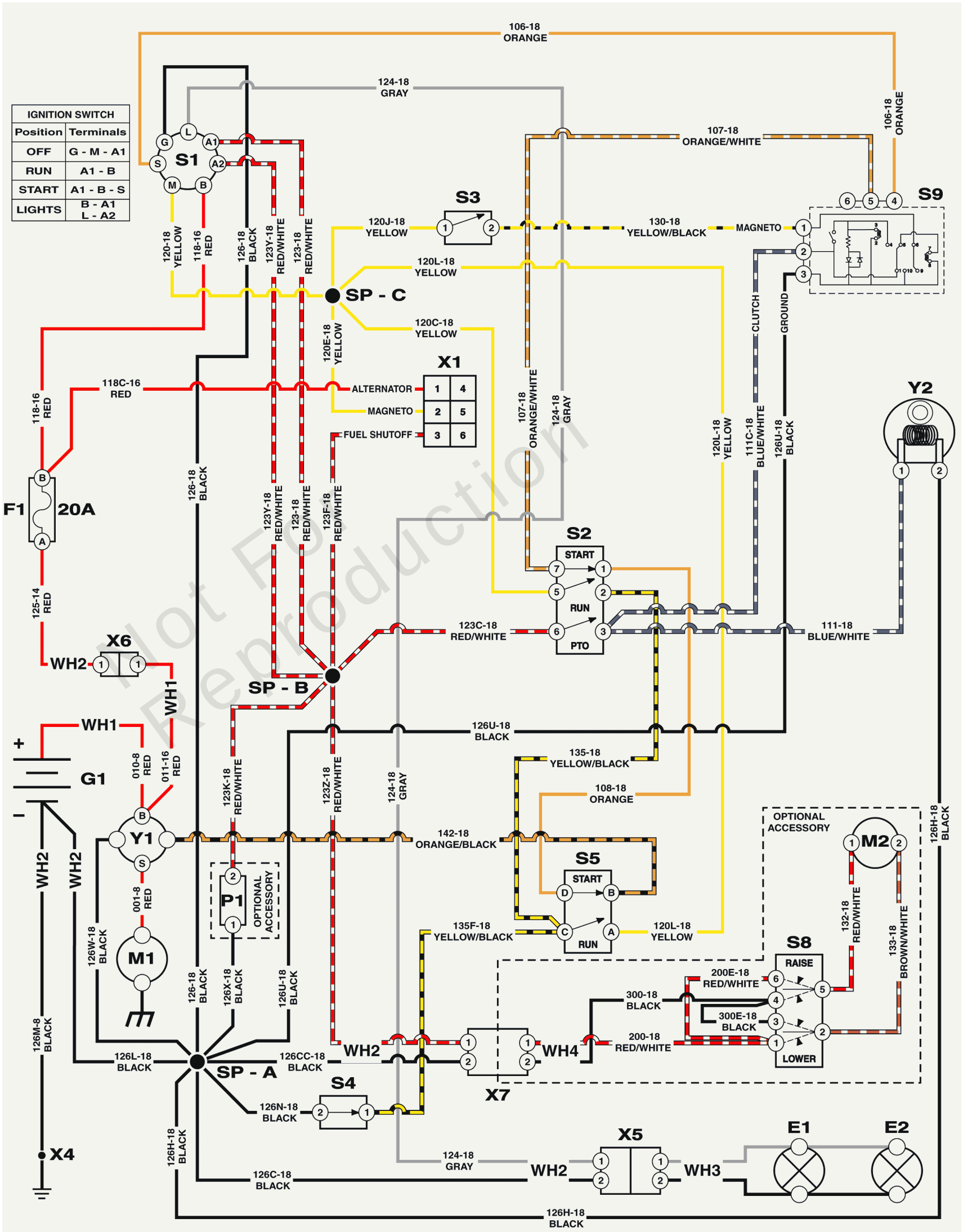

Not For Reproduction

Copyright © Briggs & Stratton. All Rights reserved

Electrical Schematic -

REF NO	PART NO	QTY	DESCRIPTION
	-----		NOTE: All electrical components represented within this electrical schematic are at rest state (no power applied).
E1	-----	1	HEADLIGHT, Left
E2	-----	1	HEADLIGHT, Right
F1	1731957SM	1	FUSE, Wiring Harness
G1	-----	1	BATTERY, 12 Volt, 230 CCA
M1	592599	1	MOTOR, Starter
M2	1761788YP	1	MOTOR, Electric -(Optional Accessory)
P1	1731185SM	1	METER-HOUR DIGITAL NO -(Optional Accessory)
S1	1761507YP	1	SWITCH, Ignition
S2	1722887YP	1	SWITCH, PTO Push/Pull, Yel Knob w/Symbols, 8 Terminal
S3	1720411SM	1	SWITCH, NO, Black, Push Button W/Boot -(Reverse Switch)
S4	1714771SM	1	SWITCH, Seat, Gray Switch, Gray Retainer
S5	7022886YP	1	SWITCH, DP NO/NC SNAP -(Brake Pedal Switch)
S8	1761475YP	1	SWITCH, Height of Cut -(Optional Accessory)
S9	1761897YP	1	SWITCH, Reverse Mow Option
SP-A	-----	1	SPLICE - A -(Splices are internal to the wire harness.)
SP-B	-----	1	SPLICE - B -(Splices are internal to the wire harness.)
SP-C	-----	1	SPLICE - C -(Splices are internal to the wire harness.)
WH1	1759779YP	1	HARNESS, Battery, Solenoid
WH2	1761300YP	1	HARNESS, Main
WH3	1761298YP	1	HARNESS, Headlight
WH4	1761347YP	1	HARNESS, Height of Cut -(Optional Accessory)
X1	-----	1	CONNECTOR, Engine
X4	-----	1	CHASSIS GROUND POINT
X5	-----	1	CONNECTOR, Main Harness to Headlight Harness
X6	-----	1	CONNECTOR, Battery Solenoid Harness to Main Harness
X7	-----	1	CONNECTOR, Main Harness to Height of Cut Harness
Y1	1755381YP	1	SOLENOID, L-BRACKET -(Starter Solenoid)
Y2	1760986YP	1	OGURA CLUTCH -(PTO Clutch)

Not For Reproduction

Copyright © Briggs & Stratton. All Rights reserved

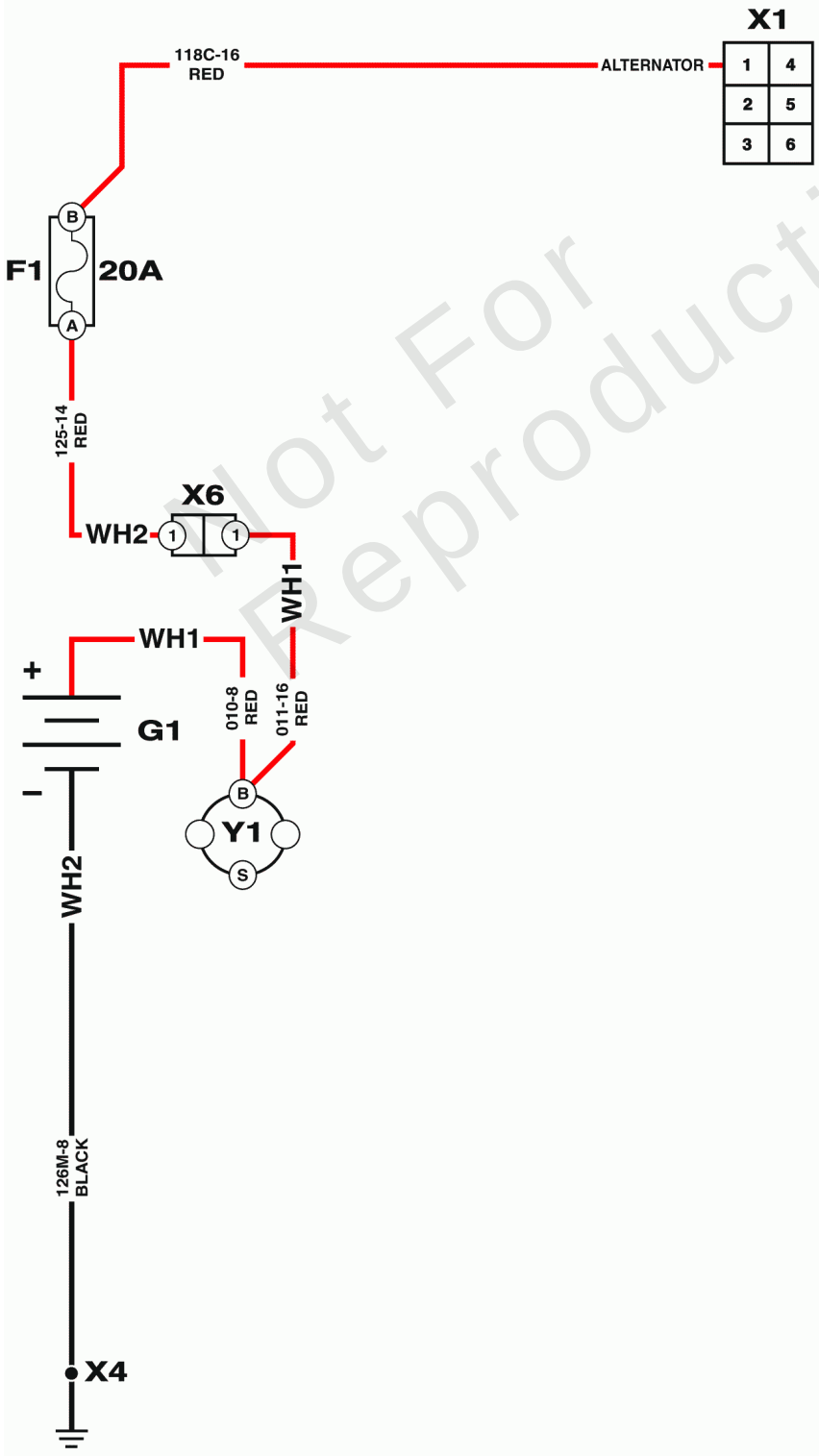

Pilot For Reproduction

Electrical Schematic - Charging Circuit

REF NO	PART NO	QTY	DESCRIPTION
	-----		NOTE: All electrical components represented within this electrical schematic are at rest state (no power applied).
F1	1731957SM	1	FUSE, Wiring Harness
G1	-----	1	BATTERY, 12 Volt, 230 CCA
WH1	1759779YP	1	HARNESS, Battery, Solenoid
WH2	1761300YP	1	HARNESS, Main
X1	-----	1	CONNECTOR, Engine
X4	-----	1	CHASSIS GROUND POINT
X6	-----	1	CONNECTOR, Battery Solenoid Harness to Main Harness
Y1	1755381YP	1	SOLENOID, L-BRACKET -(Starter Solenoid)

Not For Reproduction

Copyright © Briggs & Stratton. All Rights reserved

Electrical Schematic - Cranking Circuit

Note: Unless noted otherwise, use the standard torque specifications

Mfg. No: 2691663-02

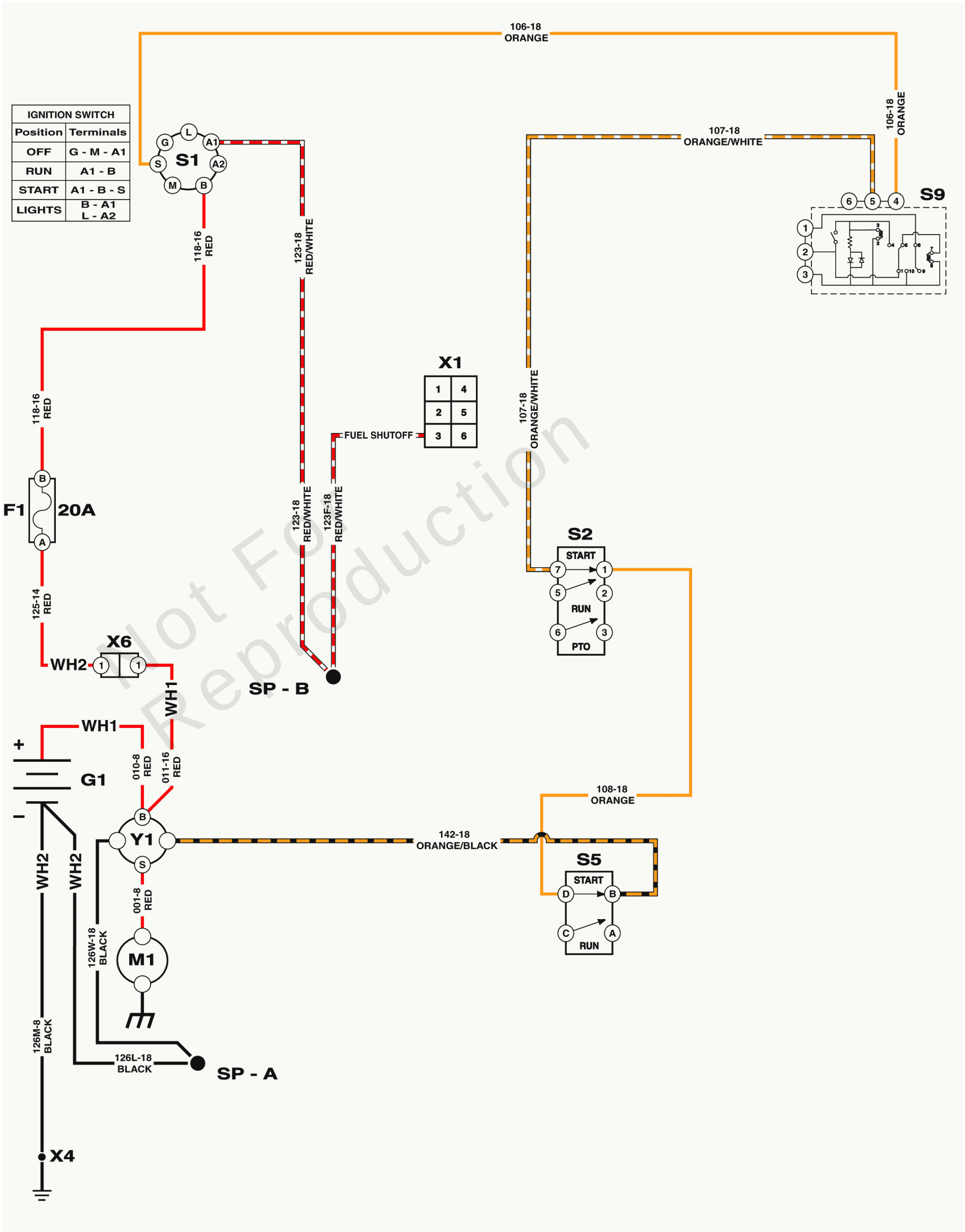

Not For Reproduction

Copyright © Briggs & Stratton. All Rights reserved

Electrical Schematic - Cranking Circuit

REF NO	PART NO	QTY	DESCRIPTION
	-----		NOTE: All electrical components represented within this electrical schematic are at rest state (no power applied).
F1	1731957SM	1	FUSE, Wiring Harness
G1	-----	1	BATTERY, 12 Volt, 230 CCA
M1	592599	1	MOTOR, Starter
S1	1761507YP	1	SWITCH, Ignition
S2	1722887YP	1	SWITCH, PTO Push/Pull, Yel Knob w/Symbols, 8 Terminal
S5	7022886YP	1	SWITCH, DP NO/NC SNAP -(Brake Pedal Switch)
S9	1761897YP	1	SWITCH, Reverse Mow Option
SP-A	-----	1	SPLICE - A -(Splices are internal to the wire harness.)
SP-B	-----	1	SPLICE - B -(Splices are internal to the wire harness.)
WH1	1759779YP	1	HARNESS, Battery, Solenoid
WH2	1761300YP	1	HARNESS, Main
X1	-----	1	CONNECTOR, Engine
X4	-----	1	CHASSIS GROUND POINT
X6	-----	1	CONNECTOR, Battery Solenoid Harness to Main Harness
Y1	1755381YP	1	SOLENOID, L-BRACKET -(Starter Solenoid)

Not For Reproduction

Copyright © Briggs & Stratton. All Rights reserved

Electrical Schematic - Headlight Circuit

Note: Unless noted otherwise, use the standard torque specifications

Mfg. No: 2691663-02

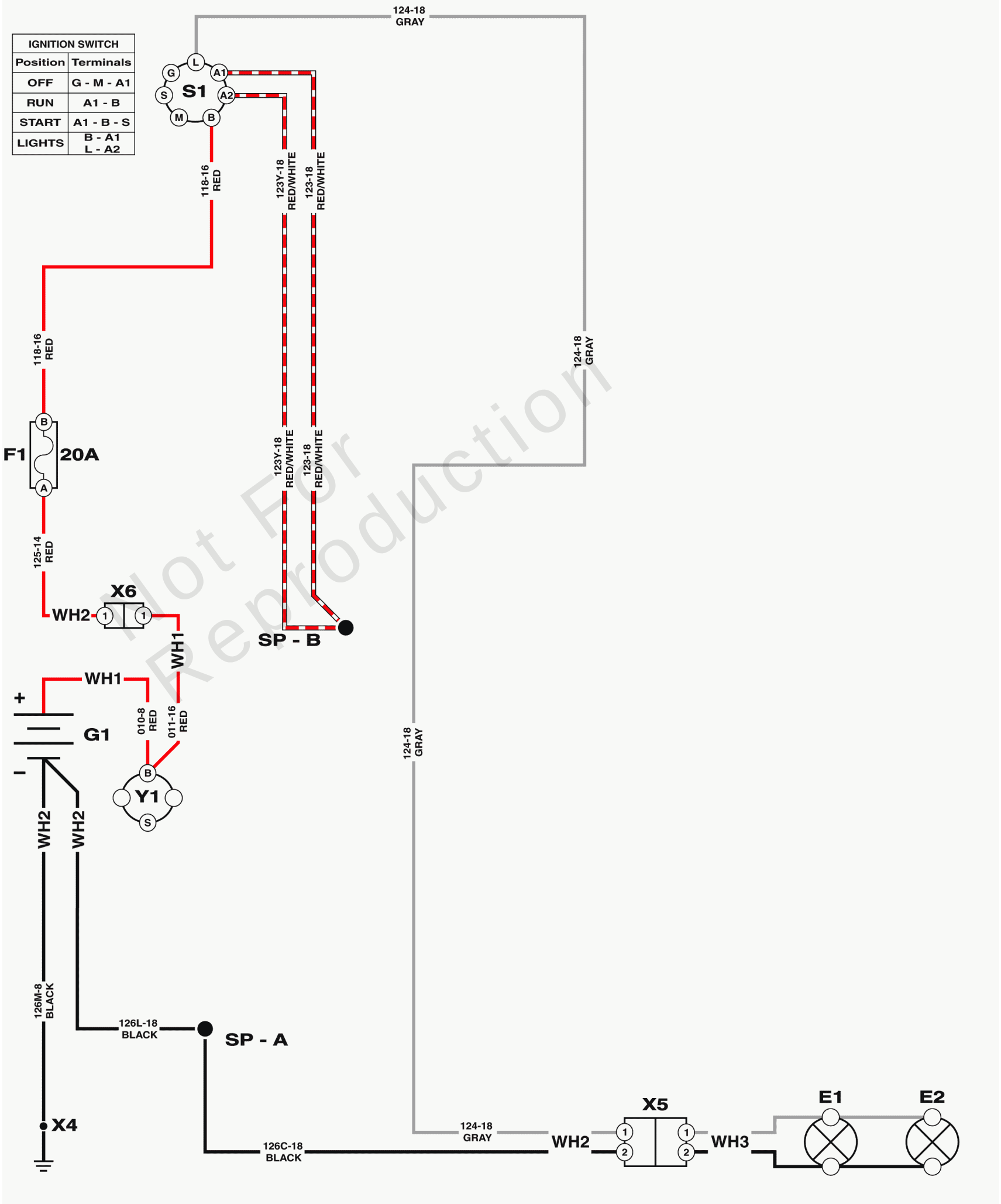

Not For Reproduction

Copyright © Briggs & Stratton. All Rights reserved

Electrical Schematic - Headlight Circuit

REF NO	PART NO	QTY	DESCRIPTION
	-----		NOTE: All electrical components represented within this electrical schematic are at rest state (no power applied).
E1	-----	1	HEADLIGHT, Left
E2	-----	1	HEADLIGHT, Right
F1	1731957SM	1	FUSE, Wiring Harness
G1	-----	1	BATTERY, 12 Volt, 230 CCA
S1	1761507YP	1	SWITCH, Ignition
SP-A	-----	1	SPLICE - A -(Splices are internal to the wire harness.)
SP-B	-----	1	SPLICE - B -(Splices are internal to the wire harness.)
WH1	1759779YP	1	HARNESS, Battery, Solenoid
WH2	1761300YP	1	HARNESS, Main
WH3	1761298YP	1	HARNESS, Headlight
X4	-----	1	CHASSIS GROUND POINT
X5	-----	1	CONNECTOR, Main Harness to Headlight Harness
X6	-----	1	CONNECTOR, Battery Solenoid Harness to Main Harness
Y1	1755381YP	1	SOLENOID, L-BRACKET -(Starter Solenoid)

Not For Reproduction

Copyright © Briggs & Stratton. All Rights reserved

Electrical Schematic - Height of Cut

Note: Unless noted otherwise, use the standard torque specifications

Mfg. No: 2691663-02

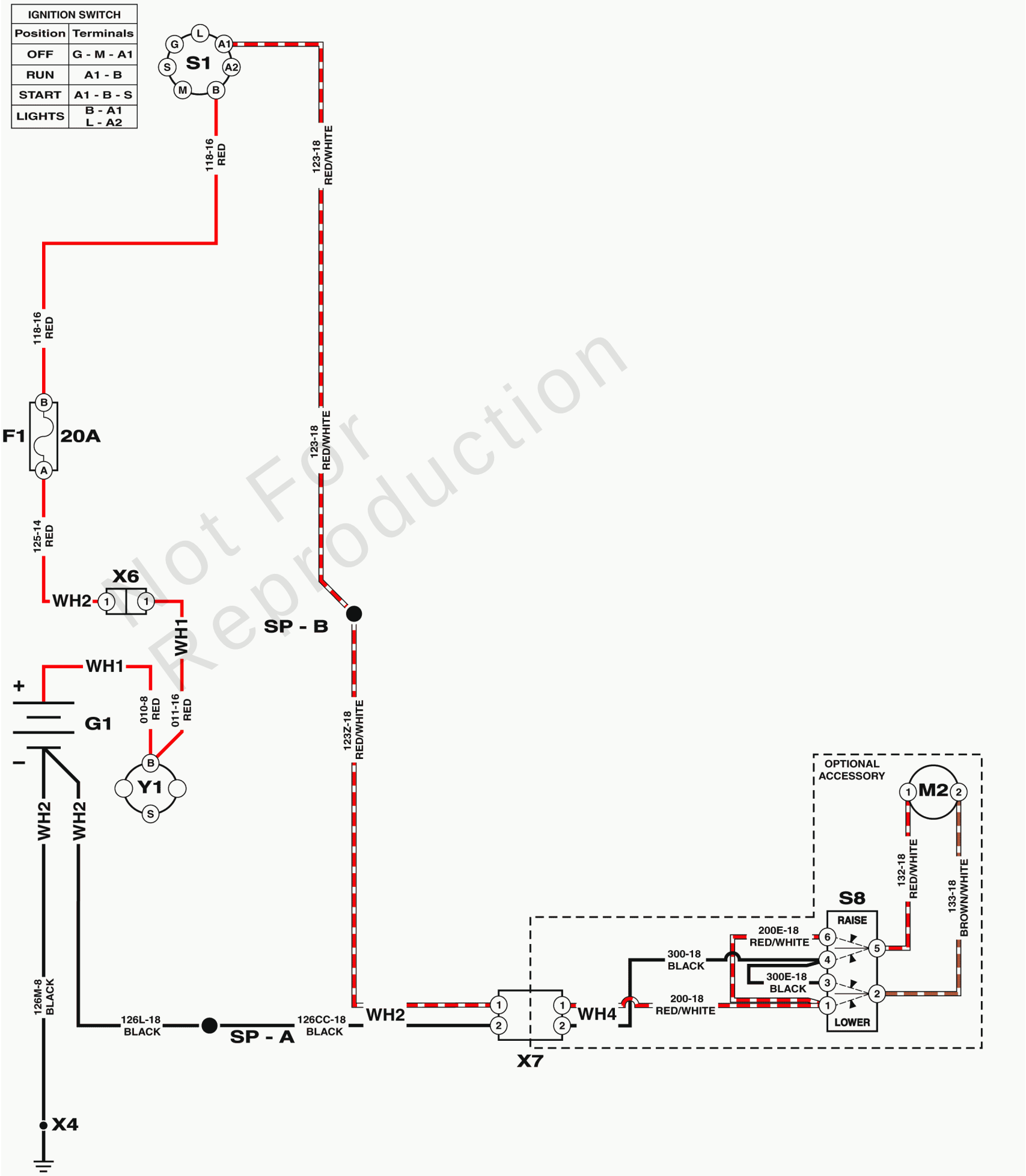

Not For Reproduction

Copyright © Briggs & Stratton. All Rights reserved

Electrical Schematic - Height of Cut

REF NO	PART NO	QTY	DESCRIPTION
	-----		NOTE: All electrical components represented within this electrical schematic are at rest state (no power applied).
F1	1731957SM	1	FUSE, Wiring Harness
G1	-----	1	BATTERY, 12 Volt, 230 CCA
M2	1761788YP	1	MOTOR, Electric -(Optional Accessory)
S1	1761507YP	1	SWITCH, Ignition
S8	1761475YP	1	SWITCH, Height of Cut -(Optional Accessory)
SP-A	-----	1	SPLICE - A -(Splices are internal to the wire harness.)
SP-B	-----	1	SPLICE - B -(Splices are internal to the wire harness.)
WH1	1759779YP	1	HARNESS, Battery, Solenoid
WH2	1761300YP	1	HARNESS, Main
WH4	1761347YP	1	HARNESS, Height of Cut -(Optional Accessory)
X4	-----	1	CHASSIS GROUND POINT
X6	-----	1	CONNECTOR, Battery Solenoid Harness to Main Harness
X7	-----	1	CONNECTOR, Main Harness to Height of Cut Harness
Y1	1755381YP	1	SOLENOID, L-BRACKET -(Starter Solenoid)

Not For Reproduction

Copyright © Briggs & Stratton. All Rights reserved

Electrical Schematic - Hour Meter

Note: Unless noted otherwise, use the standard torque specifications

Mfg. No: 2691663-02

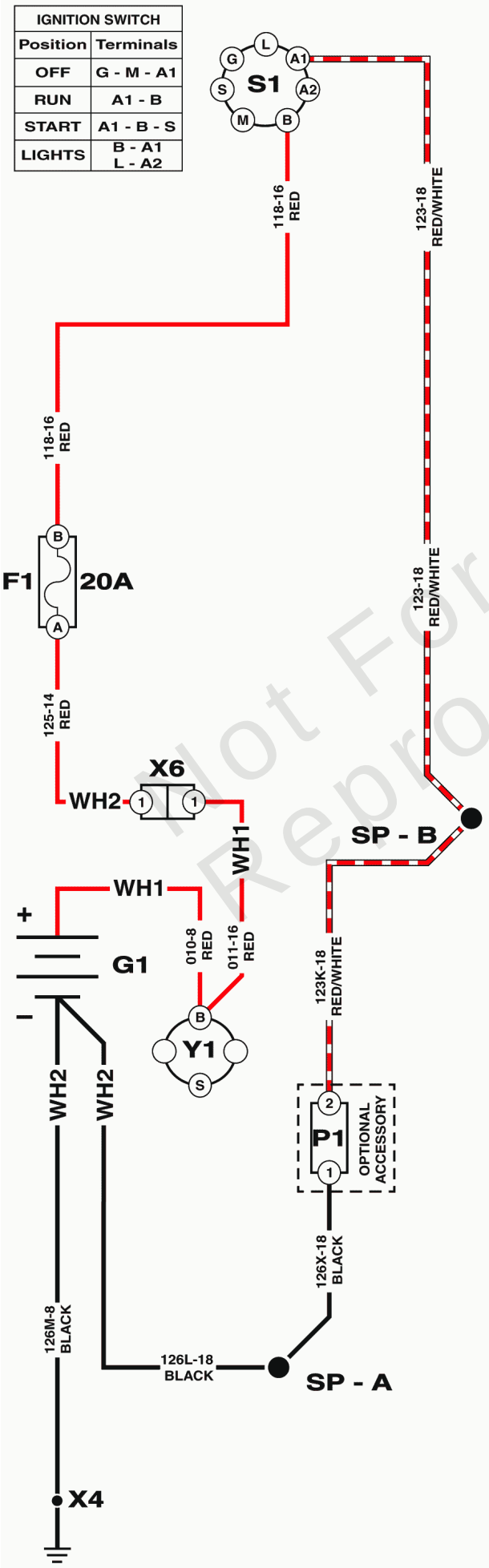

Not For Reproduction

Copyright © Briggs & Stratton. All Rights reserved

Electrical Schematic - Hour Meter

REF NO	PART NO	QTY	DESCRIPTION
	-----		NOTE: All electrical components represented within this electrical schematic are at rest state (no power applied).
F1	1731957SM	1	FUSE, Wiring Harness
G1	-----	1	BATTERY, 12 Volt, 230 CCA
P1	1731185SM	1	METER-HOUR DIGITAL NO -(Optional Accessory)
S1	1761507YP	1	SWITCH, Ignition
SP-A	-----	1	SPLICE - A -(Splices are internal to the wire harness.)
SP-B	-----	1	SPLICE - B -(Splices are internal to the wire harness.)
WH1	1759779YP	1	HARNESS, Battery, Solenoid
WH2	1761300YP	1	HARNESS, Main
X4	-----	1	CHASSIS GROUND POINT
X6	-----	1	CONNECTOR, Battery Solenoid Harness to Main Harness
Y1	1755381YP	1	SOLENOID, L-BRACKET -(Starter Solenoid)

Not For Reproduction

Copyright © Briggs & Stratton. All Rights reserved

Electrical Schematic - Ignition Shutdown

Note: Unless noted otherwise, use the standard torque specifications

Mfg. No: 2691663-02

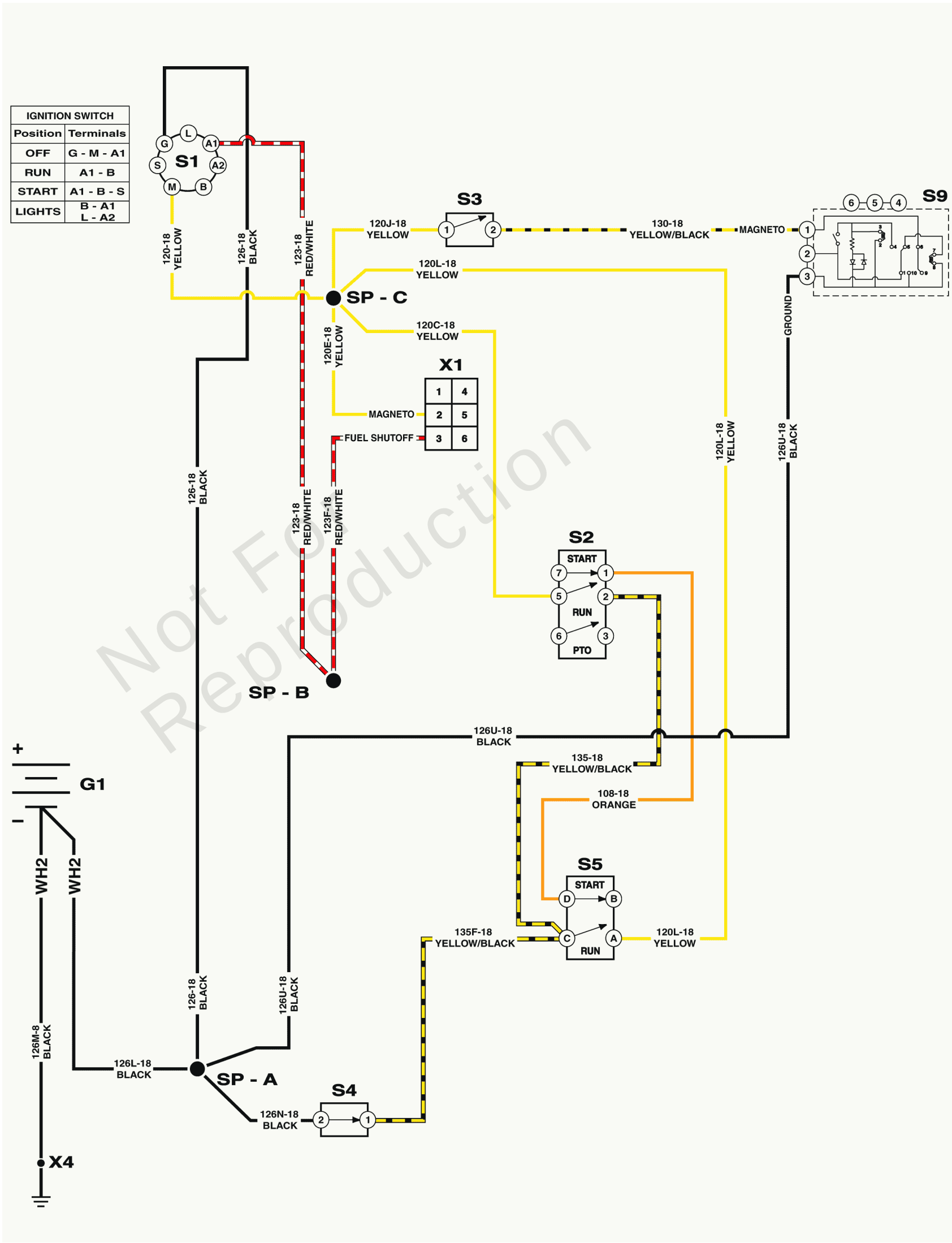

Not For Reproduction

Copyright © Briggs & Stratton. All Rights reserved

Electrical Schematic - Ignition Shutdown

REF NO	PART NO	QTY	DESCRIPTION
	-----		NOTE: All electrical components represented within this electrical schematic are at rest state (no power applied).
G1	-----	1	BATTERY, 12 Volt, 230 CCA
S1	1761507YP	1	SWITCH, Ignition
S2	1722887YP	1	SWITCH, PTO Push/Pull, Yel Knob w/Symbols, 8 Terminal
S3	1720411SM	1	SWITCH, NO, Black, Push Button W/Boot -(Reverse Switch)
S4	1714771SM	1	SWITCH, Seat, Gray Switch, Gray Retainer
S5	7022886YP	1	SWITCH, DP NO/NC SNAP -(Brake Pedal Switch)
S9	1761897YP	1	SWITCH, Reverse Mow Option
SP-A	-----	1	SPLICE - A -(Splices are internal to the wire harness.)
SP-B	-----	1	SPLICE - B -(Splices are internal to the wire harness.)
SP-C	-----	1	SPLICE - C -(Splices are internal to the wire harness.)
WH2	1761300YP	1	HARNESS, Main
X1	-----	1	CONNECTOR, Engine
X4	-----	1	CHASSIS GROUND POINT

Not For Reproduction

Copyright © Briggs & Stratton. All Rights reserved

Electrical Schematic - PTO Clutch Circuit

Note: Unless noted otherwise, use the standard torque specifications

Mfg. No: 2691663-02

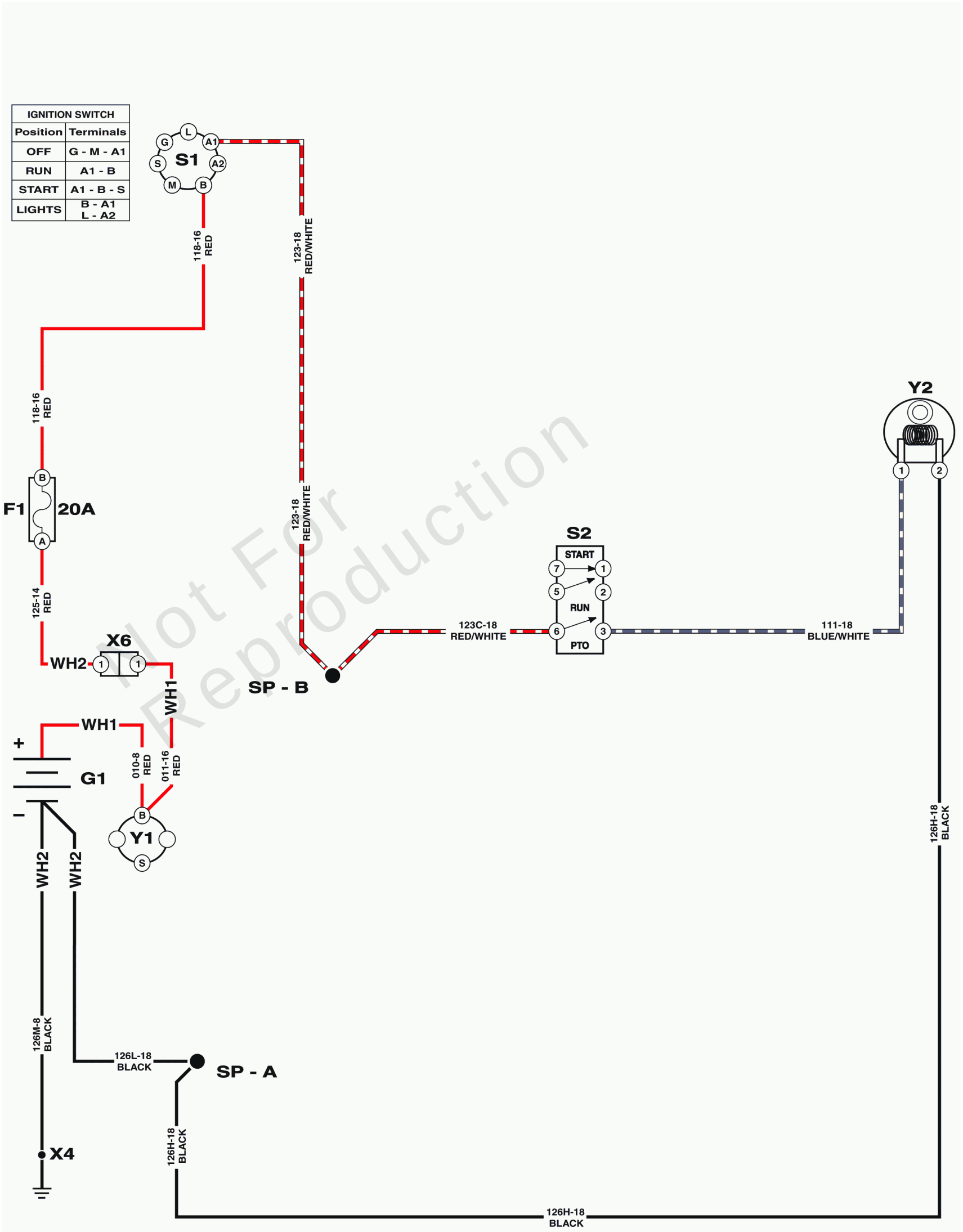

Not For Reproduction

Copyright © Briggs & Stratton. All Rights reserved

Electrical Schematic - PTO Clutch Circuit

REF NO	PART NO	QTY	DESCRIPTION
	-----		NOTE: All electrical components represented within this electrical schematic are at rest state (no power applied).
F1	1731957SM	1	FUSE, Wiring Harness
G1	-----	1	BATTERY, 12 Volt, 230 CCA
S1	1761507YP	1	SWITCH, Ignition
S2	1722887YP	1	SWITCH, PTO Push/Pull, Yel Knob w/Symbols, 8 Terminal
SP-A	-----	1	SPLICE - A -(Splices are internal to the wire harness.)
SP-B	-----	1	SPLICE - B -(Splices are internal to the wire harness.)
WH1	1759779YP	1	HARNESS, Battery, Solenoid
WH2	1761300YP	1	HARNESS, Main
X4	-----	1	CHASSIS GROUND POINT
X6	-----	1	CONNECTOR, Battery Solenoid Harness to Main Harness
Y1	1755381YP	1	SOLENOID, L-BRACKET -(Starter Solenoid)
Y2	1760986YP	1	OGURA CLUTCH -(PTO Clutch)

Not For Reproduction

Copyright © Briggs & Stratton. All Rights reserved

Engine Group

Note: Unless noted otherwise, use the standard torque specifications

Mfg. No: 2691663-02

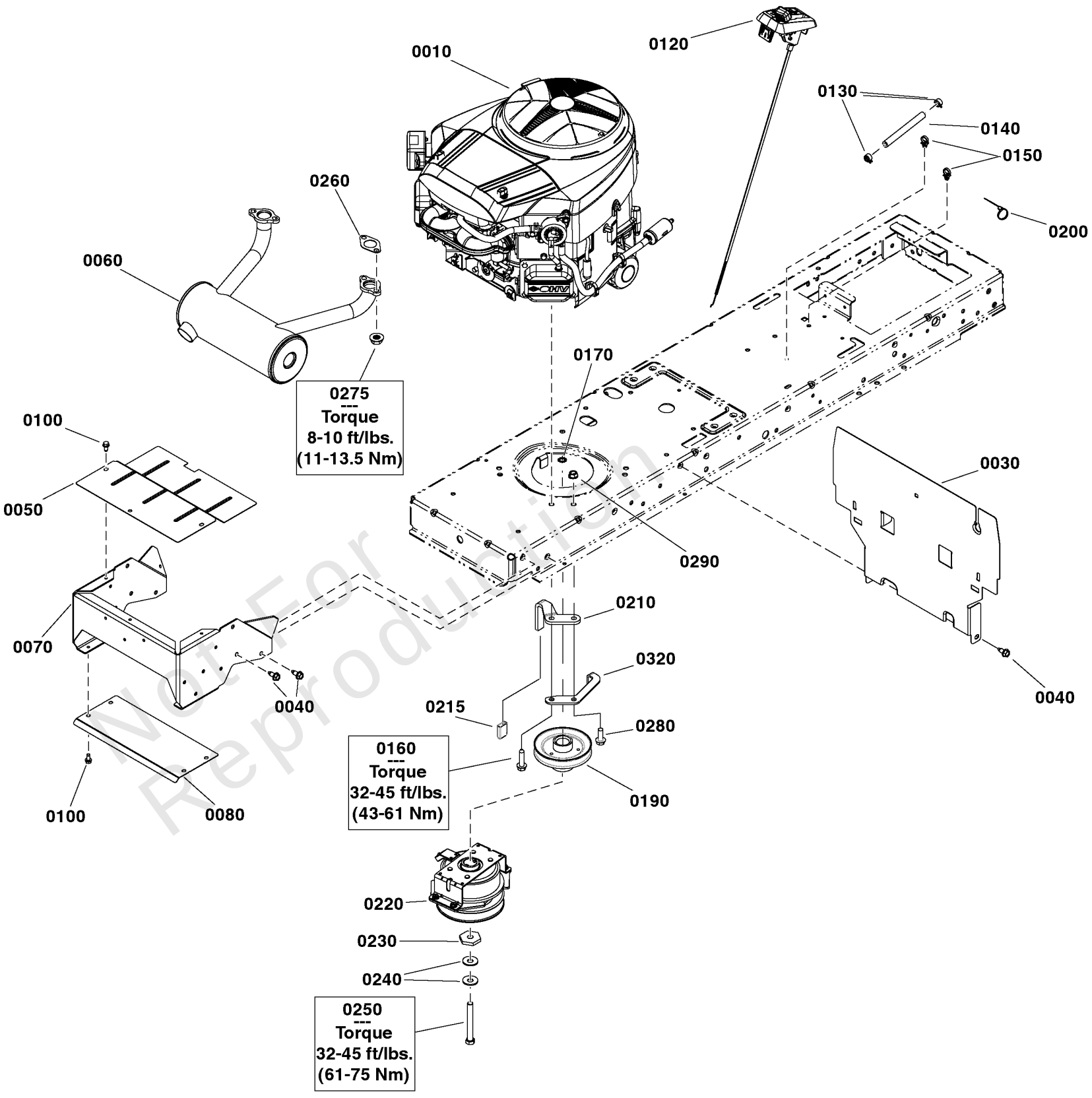

Not For Reproduction

Copyright © Briggs & Stratton. All Rights reserved

Engine Group

REF NO	PART NO	QTY	DESCRIPTION
0010	44S977-0048-G1	1	* ENGINE, 25 Gross HP Briggs & Stratton Pro Series, VS Twin -(Engine Model: 44S977-0048-G1)
0030	1738380AYP	1	HEAT SHIELD, Engine
0040	703228	6	SCREW, 5/16-18 X .75
0050	1761064CJYP	1	HEAT SHIELD
0060	1761127YP	1	MUFFLER, Twin
0070	1761211CJYP	1	Support, Muffler
0080	1761063CJYP	1	HEAT SHIELD, Bottom
0100	704130	7	SCREW, HEX, 1/4-20X.5
0120	1759240YP	1	THROTTLE
0130	791850	2	CLAMP, Hose
0140	845503	1	LINE-FUEL
0150	1730268SM	2	CLIP, Hose, 1/2 Dia., Push In
0160	704010	4	SCREW, HEX, 3/8-16
0170	703864	1	WASHER, EXT, 3/8
0190	1732576SM	1	PULLEY & HUB ASSEMBLY, Engine
0200	703586	1	TIE, SELF LOCKING
0210	1760323CJYP	1	CLUTCH, Anchor
0215	84002544	1	Sleeve, Clutch Anchor
0220	1760986YP	1	OGURA CLUTCH -(Position clutch as illustrated)
0230	1708264SM	1	WASHER, HEX, 0.453ID
0240	1960769YP	2	WASHER, Belleville
0250	771023	1	CAPSCREW, Hex Head, Loctite, 7/16-20 x 3 1/2
0260	690970	2	GASKET, Exhaust
0275	690941	4	NUT
0280	704038	1	SCREW
0290	703333	1	NUT, 3/8-16
0320	84004562	1	GUIDE, Belt

Not For Reproduction

Footnotes:

Note* See your local Briggs & Stratton distributor for parts & service.

Copyright © Briggs & Stratton. All Rights reserved

Frame & Front Axle Group

Note: Unless noted otherwise, use the standard torque specifications

Mfg. No: 2691663-02

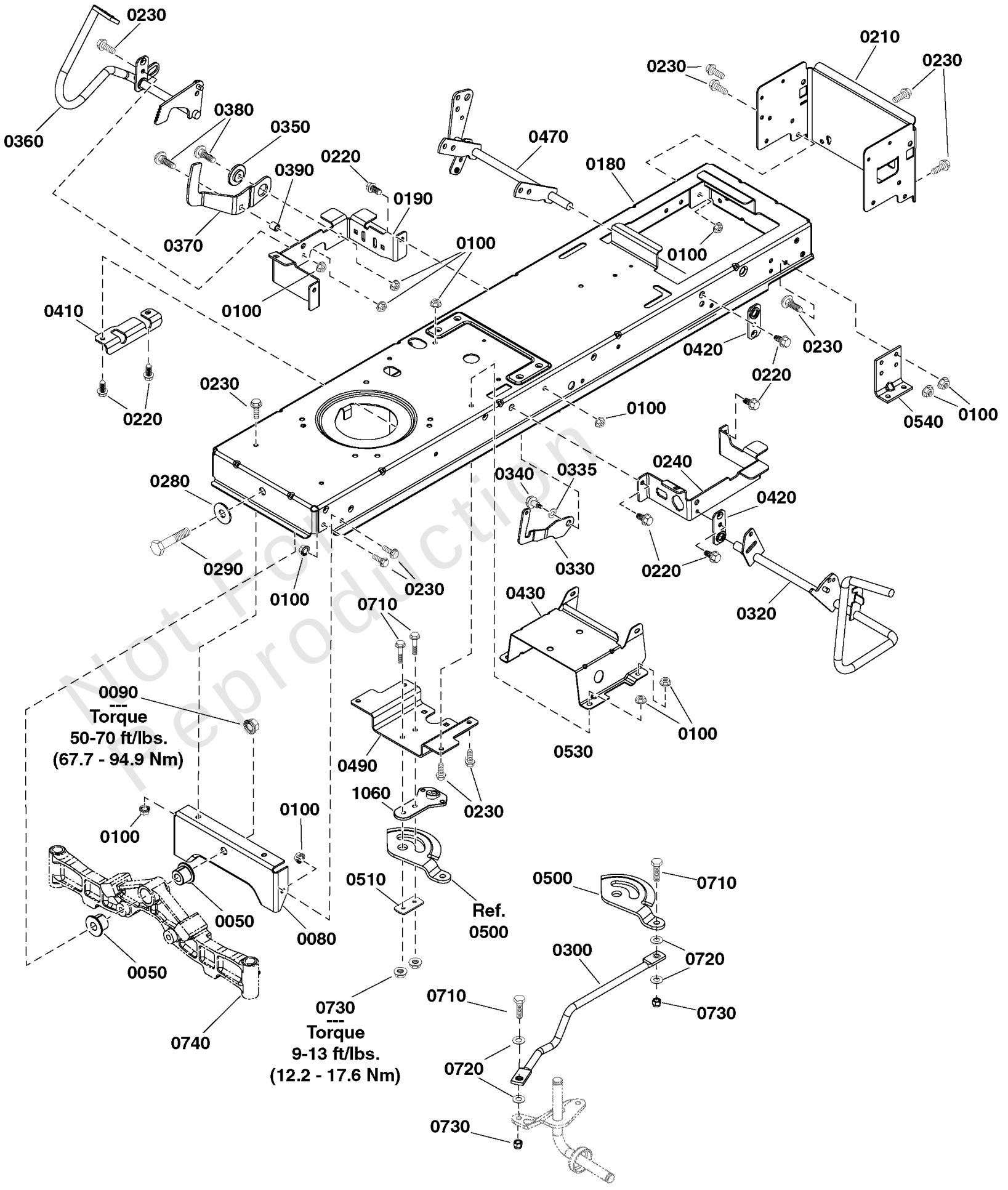

Not For Reproduction

Copyright © Briggs & Stratton. All Rights reserved

Frame & Front Axle Group

REF NO	PART NO	QTY	DESCRIPTION
0050	1730186SM	2	BUSHING, Axle Pivot
0080	1727902SM	1	PLATE, Axle Support
0090	2860646SM	1	NUT, Hex Flange, 5/8-11
0100	703409	26	NUT, 5/16-18, GR5
0180	-----	1	FRAME
0190	1759842BMYP	1	SUPPORT, Front Footrest, RH
0210	1758690YP	1	SUPPORT, Rear Frame
0220	703949	9	SCREW, 5/16-18.625
0230	703354	23	SCREW, 5/16-18
0240	1759841BMYP	1	SUPPORT, Front Footrest, LH
0280	1960035SM	1	WASHER-0.625(0.64IDX1
0290	2860744SM	1	CAPSCREW, Hex Head, 5/8-11 x 3 1/4
0300	1738051YP	1	LINK, Drag (with Bearing), 5/16
0320	1736404AYP	1	PEDAL ASSY, BRAKE
0330	1735595YP	1	LATCH, Brake Lock
0335	7014296YP	1	WASHER, Shim
0340	703851	1	BOLT, 5/16-18X1.15
0350	1727935SM	1	SPACER-PIVOT 0.330ID
0360	1736714AYP	1	FORWARD PEDAL ASSEMBLY
0370	1727246SM	1	PEDAL, Reverse
0380	703446	2	BOLT, 5/16-18X1.25 G5
0390	1728024SM	1	SPACER, Foot Pedal
0410	885591YP	1	BRACKET, PEDAL PIVOT
0420	1727911ASM	2	PLATE, Bearing
0430	1727282ASM	1	SUPPORT, Battery 12 GA
0470	1737957YP	1	LIFT SHAFT ASSEMBLY
0490	1761009YP	1	BRACKET, Sector Support
0500	1751110YP	1	GEAR, Steering
0510	1761011CJYP	1	PLATE, Sector Gear
0530	703185	2	BOLT, Round Head, Short Square Neck
0540	1727903ASM	2	SUPPORT, Transmission
0710	703570	4	CAPSCREW, Hex Head, 5/16-18 x 1 1/4
0720	1919326SM	4	WASHER, 5/16
0730	704067	6	NUT, HEX FLNG,5/16-18 -(Torque to 12-17 ft/lbs)
0740	-----	1	Refer to: Front Axle Group
1060	1761010YP	1	SUPPORT, Steering

Not For Reproduction

Copyright © Briggs & Stratton. All Rights reserved

Note: Unless noted otherwise, use the standard torque specifications

Mfg. No: 2691663-02

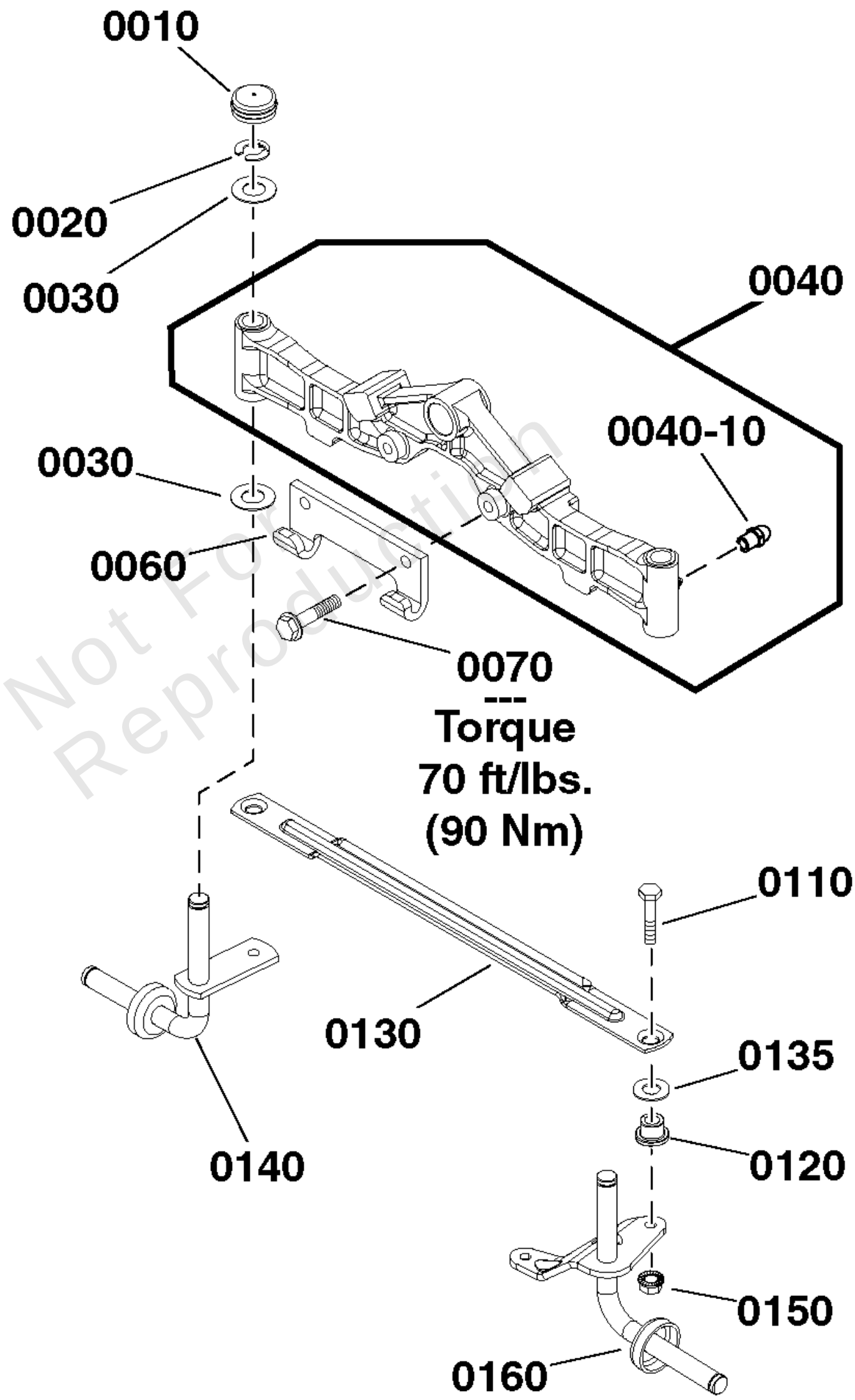

Not For Reproduction

Copyright © Briggs & Stratton. All Rights reserved

Front Axle Group

REF NO	PART NO	QTY	DESCRIPTION
0010	1734135SM	2	CAP, Hub
0020	1611710SM	2	E-RING, 3/4
0030	2860183SM	4	WASHER, Flat, 3/4
0040	1756386YP	1	AXLE, Front
0040-10	1704314SM	2	LUBE FITTING, .250 DR -(Included with Ref. No. 0040)
0060	1721918ASM	1	HOOK, Mower, Hitch
0070	1960652SM	2	SCREW, Hex Flange, Whiz Lock, 7/16-14 x 1-1/2
0110	1960032SM	2	SCREW, Hex Head, 3/8-16 x 1 1/4
0120	1731912SM	2	BUSHING, 3/8 ID x 5/8 OD x 1/2
0130	1751964YP	1	TIE ROD
0135	1960703SM	2	WASHER, 5/8
0140	1727872ASM	1	SPINDLE ASSEMBLY, R.H.
0150	703893	2	NUT, CNTR LCK, 3/8-16
0160	1751922YP	1	SPINDLE ASSEMBLY, L.H.

Not For Reproduction

Copyright © Briggs & Stratton. All Rights reserved

Hood, Grille & Dash Group

Note: Unless noted otherwise, use the standard torque specifications

Mfg. No: 2691663-02

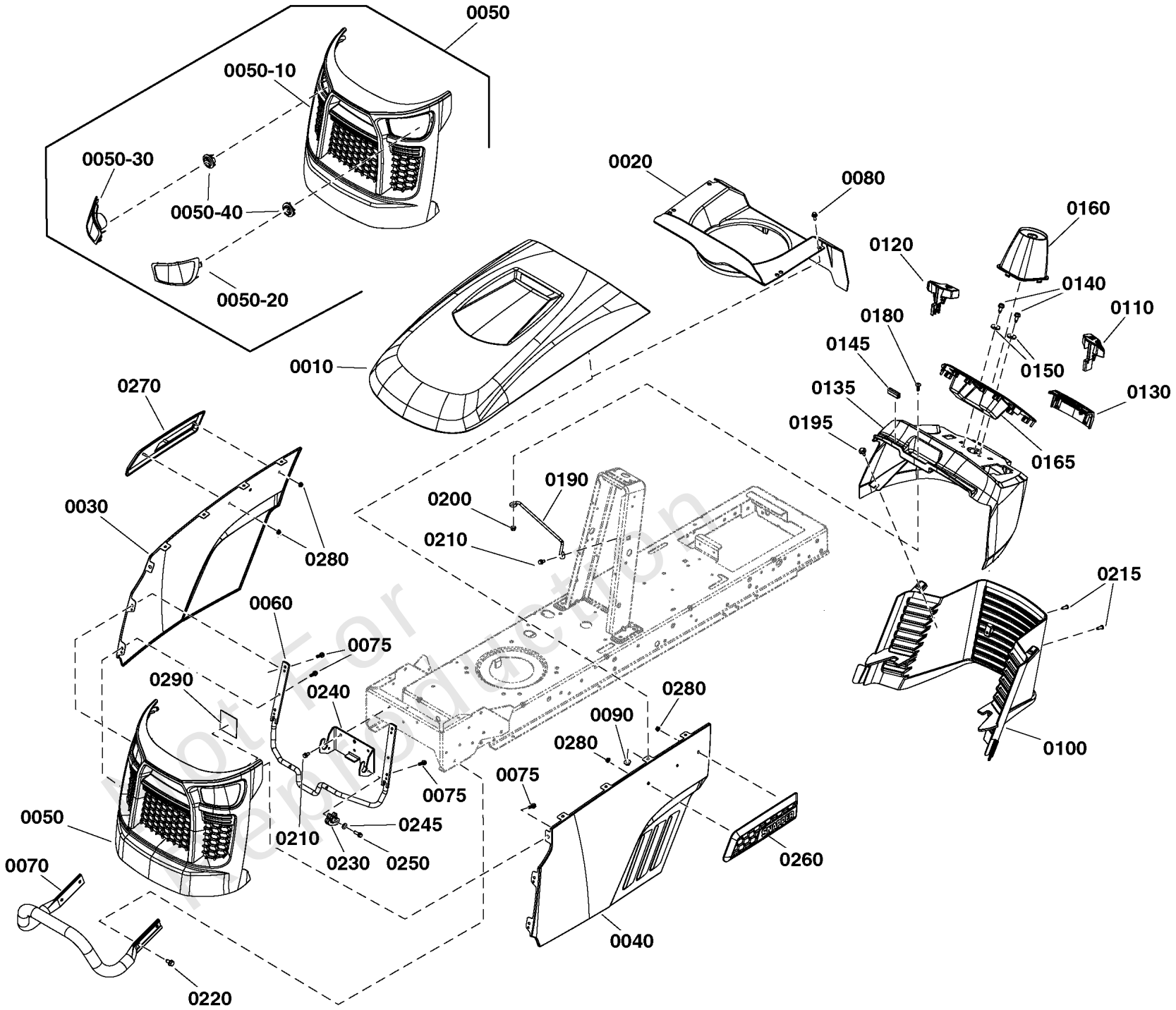

Not for Reproduction

Copyright © Briggs & Stratton. All Rights reserved

Hood, Grille & Dash Group

REF NO	PART NO	QTY	DESCRIPTION
0010	1728031DSM	1	HOOD, with Scoop
0020	7102326YP	1	AIR DUCT, Plenum
0030	1761214DYP	1	PANEL, Side RH
0040	1761215DYP	1	PANEL, Side, LH
0050	1761263YP	1	GRILLE -(Incl. Ref. Nos. 0050-10, 0050-20, 0050-30 & 0050-40)
0050-10	1761175YP	1	GRILLE, Front -(Included with Ref. No. 0050)
0050-20	1761333YP	1	HEADLIGHT, LH -(Included with Ref. No. 0050)
0050-30	1761334YP	1	HEADLIGHT, RH -(Included with Ref. No. 0050)
0050-40	1760239YP	2	LED HEADLIGHT AND SOCKET ASSEMBLY -(Included with Ref. No. 0050)
0060	1761070YP	1	ROD, Hood Hinge
0070	1761254DYP	1	BUMPER, Tube
0075	706369	6	SCREW, Hex Washer Head, 1/4-10 x 3/4
0080	1960295SM	8	CAPSCREW, Hex Flange, Whiz Lock, 1/4-20 x 5/8
0090	703161	8	NUT
0100	1761508YP	1	LOWER DASH ASSEMBLY
0110	1761401YP	1	KNOB, Parking Brake
0120	1761402YP	1	KNOB, Cruise
0130	1761510YP	1	DECORATIVE TRIM
0135	1761253YP	1	DASH, Upper
0140	703228	2	SCREW, 5/16-18 X .75
0145	1761773YP	2	EDGING, Rubber
0150	703298	2	WASHER, 5/16
0160	1761399YP	1	COVER, Steering Shaft
0165	1761464YP	1	DASH BEZEL
0180	770135	1	SCREW
0190	1761481YP	1	ROD, Dash Support
0195	2860664SM	2	SCREW, HEX SEMS WSHR,
0200	703463	1	NUT, GR5,1/4-20
0210	704130	4	SCREW, HEX, 1/4-20X.5
0215	1960556SM	2	SCREW, Pan Head Torx, Taptite, 1/4-20 x 3/4
0220	703985	4	SCREW, 5/16-18X.5
0230	1761068YP	2	CLIP, Hood Hinge
0240	1761212CJYP	1	BRACKET, Hood Hinge
0245	703332	2	WASHER
0250	703466	2	BOLT, GR5, 1/4X.0750
0260	1761342YP	1	BADGE, Snapper, LH
0270	1761343YP	1	BADGE, Snapper, RH
0280	189164GS	4	PALNUT, 3/16
0290	1761818YP	1	INSULATION, Thermal

Not For Reproduction

Copyright © Briggs & Stratton. All Rights reserved

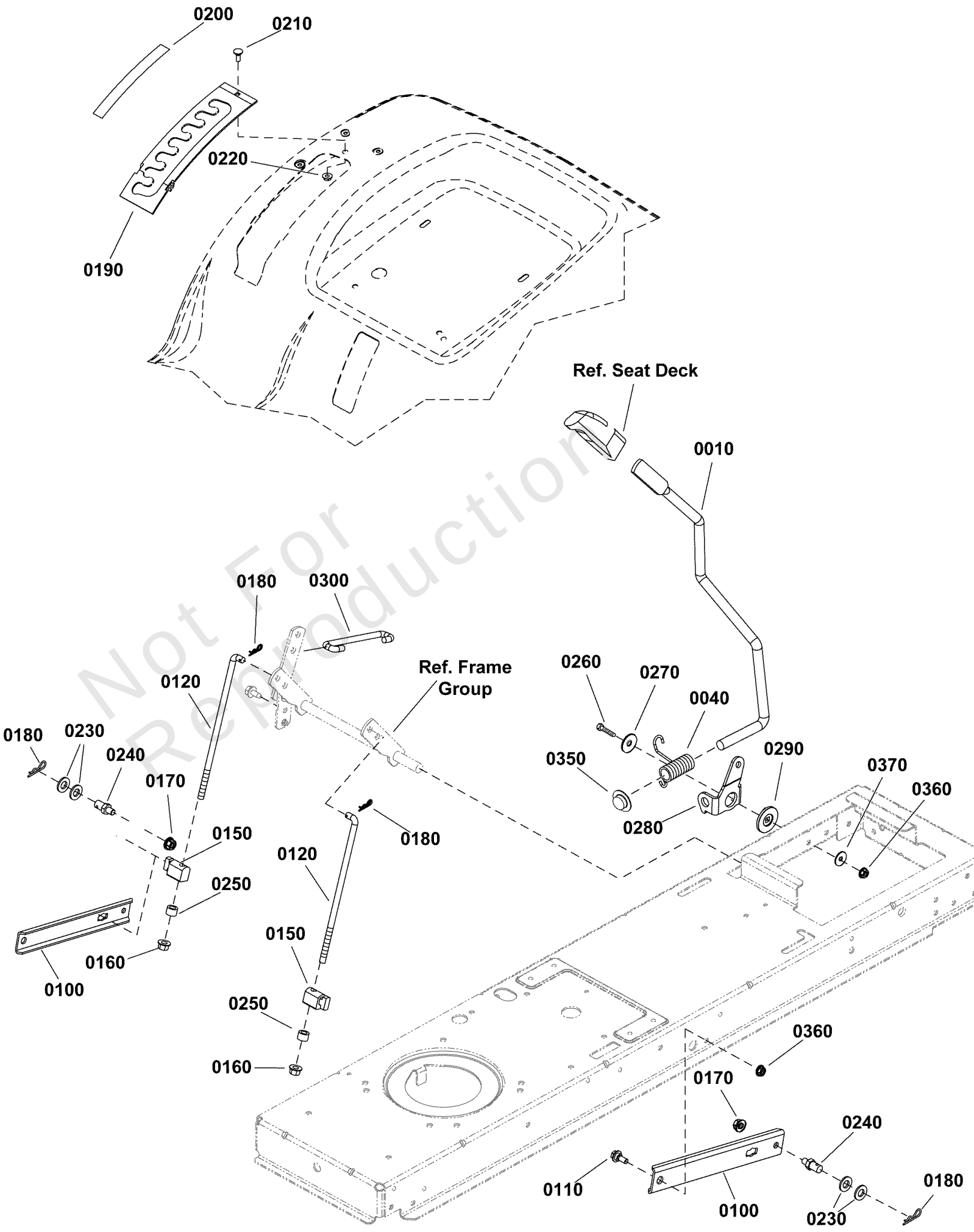

Not For Reproduction

Lift Group - Manual

REF NO	PART NO	QTY	DESCRIPTION
0010	1728070SM	1	ROD, Lift Handle, 17.7
0040	1729652SM	1	SPRING, Torsion
0100	1731417SM	2	ARM, Rear Lift
0110	1732426SM	2	BOLT-SHLDR 5/16-18 0.
0120	1727955SM	2	ROD, Lower Lift, 10.00 LG
0150	1731894SM	2	TRUNNION
0160	1960687SM	2	NUT, Hex Flange, ESNA, 3/8-16
0170	1931211SM	2	NUT, Hex, Flange Lock, 3/8-16
0180	1960074SM	4	CLIP, HAIR PIN .093DI
0190	1727985SM	1	QUADRANT, Lift Height
0200	1730264SM	1	DECAL, Height Of Cut
0210	1960252SM	1	BOLT-RD HD SH SQ NK 1
0220	1930641SM	1	NUT, Hex Flange Whiz, 1/4-20
0230	1960170SM	2	WASHER, 1/2
0240	094067MA	2	PIN, Threaded Shoulder
0250	1666294SM	2	SPACER
0260	84003606	1	SCREW
0270	1933468SM	1	WASHER, 5/16 x 1-1/4 OD
0280	1728990ASM	1	CLEVIS, Lift
0290	1727935SM	1	SPACER-PIVOT 0.330ID
0300	1727954SM	1	ROD, Lift, 5.43 LG
0350	771009	1	PUSHNUT, 5/8
0360	703115	3	NUT
0370	703298	1	WASHER, 5/16

Not For Reproduction

Copyright © Briggs & Stratton. All Rights reserved

Seat Deck & Fuel Tank Group

Note: Unless noted otherwise, use the standard torque specifications

Mfg. No: 2691663-02

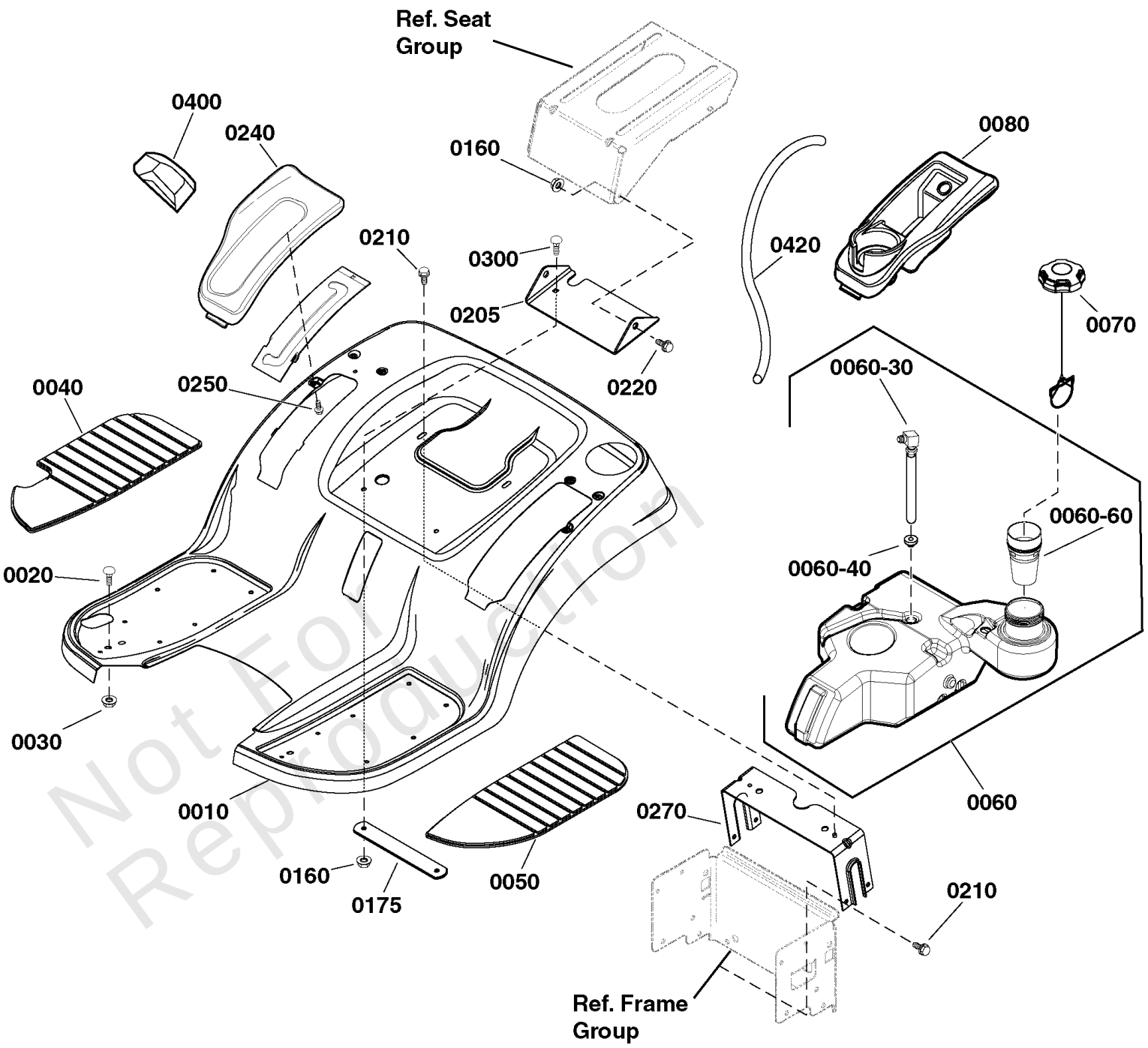

Not For Reproduction

Copyright © Briggs & Stratton. All Rights reserved

Seat Deck & Fuel Tank Group

REF NO	PART NO	QTY	DESCRIPTION
0010	1727264DSM	1	SEAT DECK
0020	703185	2	BOLT, Round Head, Short Square Neck
0030	703409	2	NUT, 5/16-18, GR5
0040	1728007SM	1	PAD, Footrest, R.H.
0050	1728006SM	1	PAD, Footrest, L.H.
0060	1751226YP	1	TANK, Fuel -(Includes Ref. Nos. 0060-30, 0060-40 & 0060-60)
0060-30	1736609YP	1	FITTING & HOSE ASSEMBLY, Fuel Tank
0060-40	1654930SM	1	BUSHING, Fuel Tank
0060-60	-----	1	DROP TUBE -(Not Serviceable. Order Ref. Nos. 0060)
0070	1761224YP	1	CAP, Fuel
0080	1739535YP	1	POD, L.H.
0160	703115	2	NUT
0175	1759177CJYP	1	BRACKET, Support, Seat Pivot
0205	1757755BMYP	1	SUPPORT, Seat Pivot
0210	703949	6	SCREW, 5/16-18.625
0220	703851	2	BOLT, 5/16-18X1.15
0240	1739537YP	1	POD, R.H.
0250	1960536SM	6	SCREW, HEX WSHR HD PL
0270	1731310SM	1	SUPPORT, Seat Deck
0300	704065	2	BOLT, 5/16-18X.875
0400	1722302SM	1	GRIP
0420	7700552X91YP	1	HOSE, VAPOR, 91" -(Cut to Length)
0440	703586	2	TIE, SELF LOCKING

Not For Reproduction

Copyright © Briggs & Stratton. All Rights reserved

Seat Group

Note: Unless noted otherwise, use the standard torque specifications

Mfg. No: 2691663-02

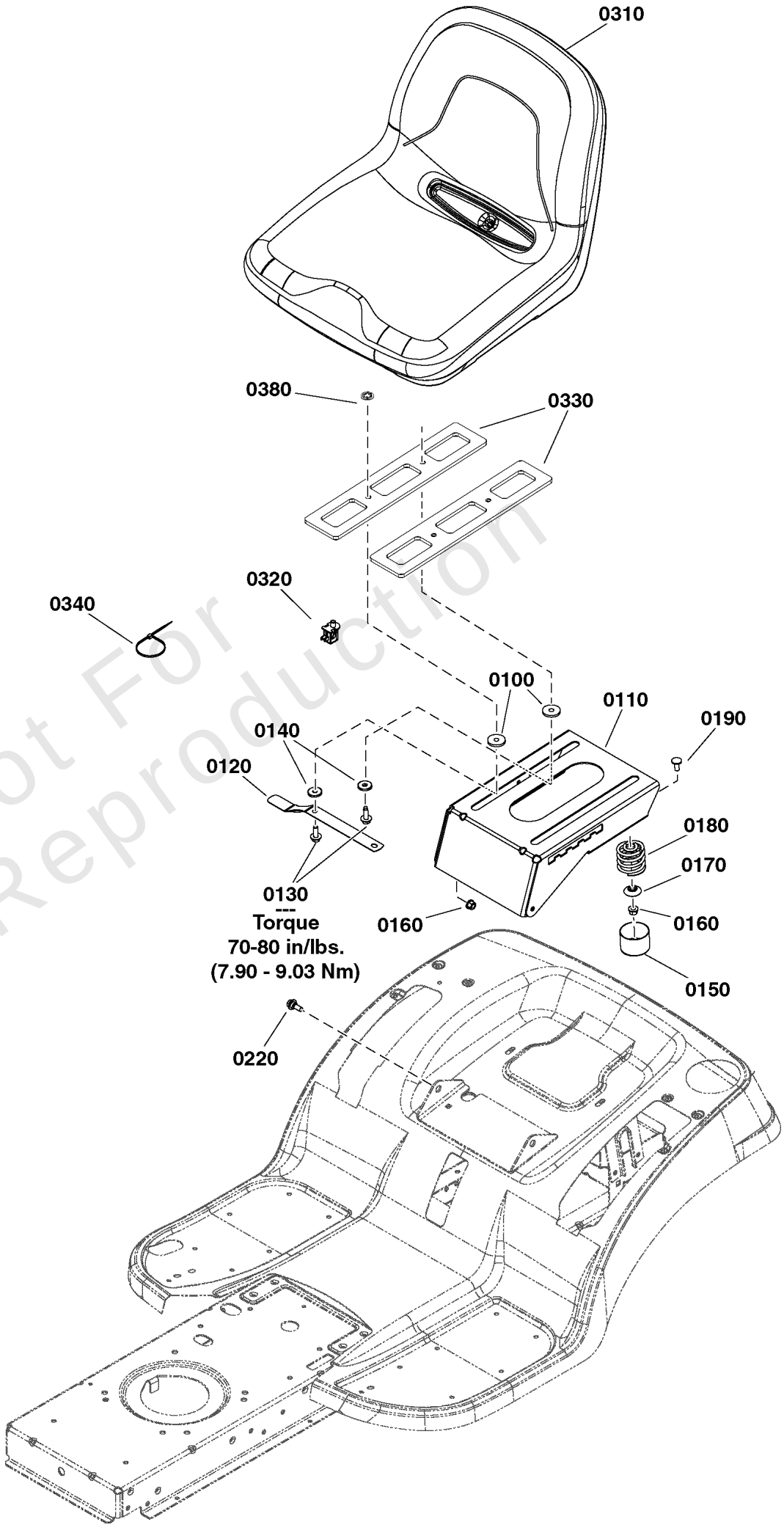

Not For Reproduction

Copyright © Briggs & Stratton. All Rights reserved

Seat Group

REF NO	PART NO	QTY	DESCRIPTION
0100	1731300SM	4	SPACER, 5/16 ID x 1-1/4 OD x 5/16"
0110	1755767BMYP	1	SUPPORT, Seat
0120	1727268BMYP	1	LATCH, Seat
0130	1933689SM	4	SCREW, 5/16-18 x 1-1/2, Hex Flange, Whiz Lock
0140	703298	4	WASHER, 5/16
0150	1704724SM	2	COVER, Spring, 1-1/2"
0160	703115	4	NUT
0170	1709256SM	2	WASHER, Spring, 5/16 x 1 1/4
0180	1704728SM	2	SPRING, Compression, 2"
0190	703225	2	BOLT
0220	703851	2	BOLT, 5/16-18X1.15
0310	84003944	1	SEAT, 15"
0320	7023354YP	1	SWITCH, SEAT
0330	84003652	2	SPACER, Plate
0340	703586	1	TIE, SELF LOCKING
0380	703297	4	RETAINER, GR5, 5/16

Not For Reproduction

Copyright © Briggs & Stratton. All Rights reserved

Note: Unless noted otherwise, use the standard torque specifications

Mfg. No: 2691663-02

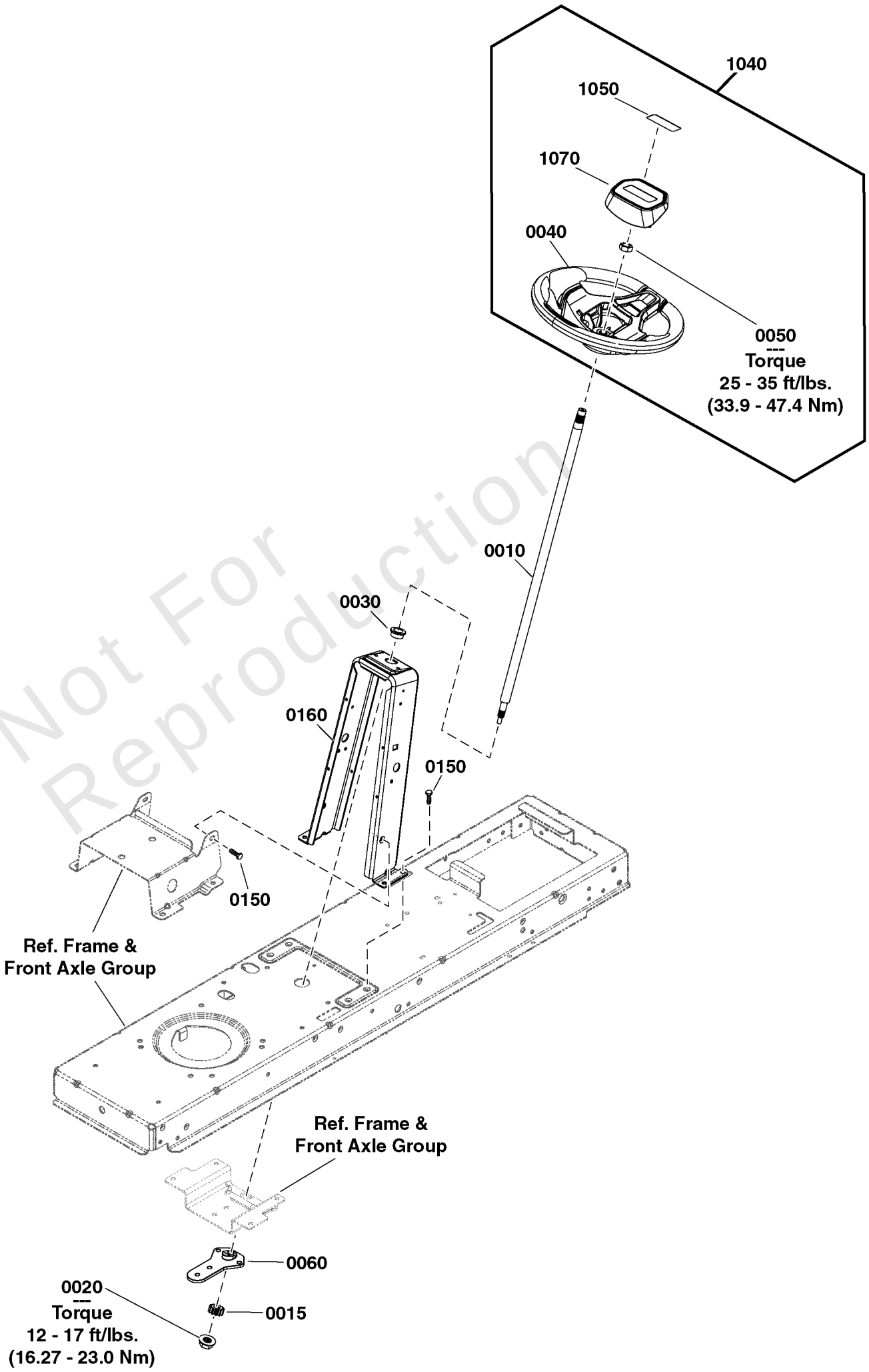

Not For Reproduction

Copyright © Briggs & Stratton. All Rights reserved

Steering Group

REF NO	PART NO	QTY	DESCRIPTION
0010	1761012YP	1	SHAFT, Steering
0015	1761013YP	1	GEAR, Pinion
0020	703115	1	NUT
0030	1729665SM	1	BUSHING, Steering, 3/4 ID
1040	84001121	1	KIT, Steering Wheel, Snapper -(Incl. Ref. Nos. 0040, 0050, 1050 & 1070)
0040	-----	1	STEERING WHEEL
0050	1960576SM	1	NUT, Hex Lock, ESNA Light, 5/8-18
1050	84002249	1	DECAL, Snapper Logo, 3.1" X .8"
1070	84002250	1	CAP, Steering Wheel
0060	1761010YP	1	SUPPORT, Steering
0150	703949	6	SCREW, 5/16-18.625
0160	1761498CJYP	1	TOWER, Steering

Not For Reproduction

Copyright © Briggs & Stratton. All Rights reserved

Transmission Group

Note: Unless noted otherwise, use the standard torque specifications

Mfg. No: 2691663-02

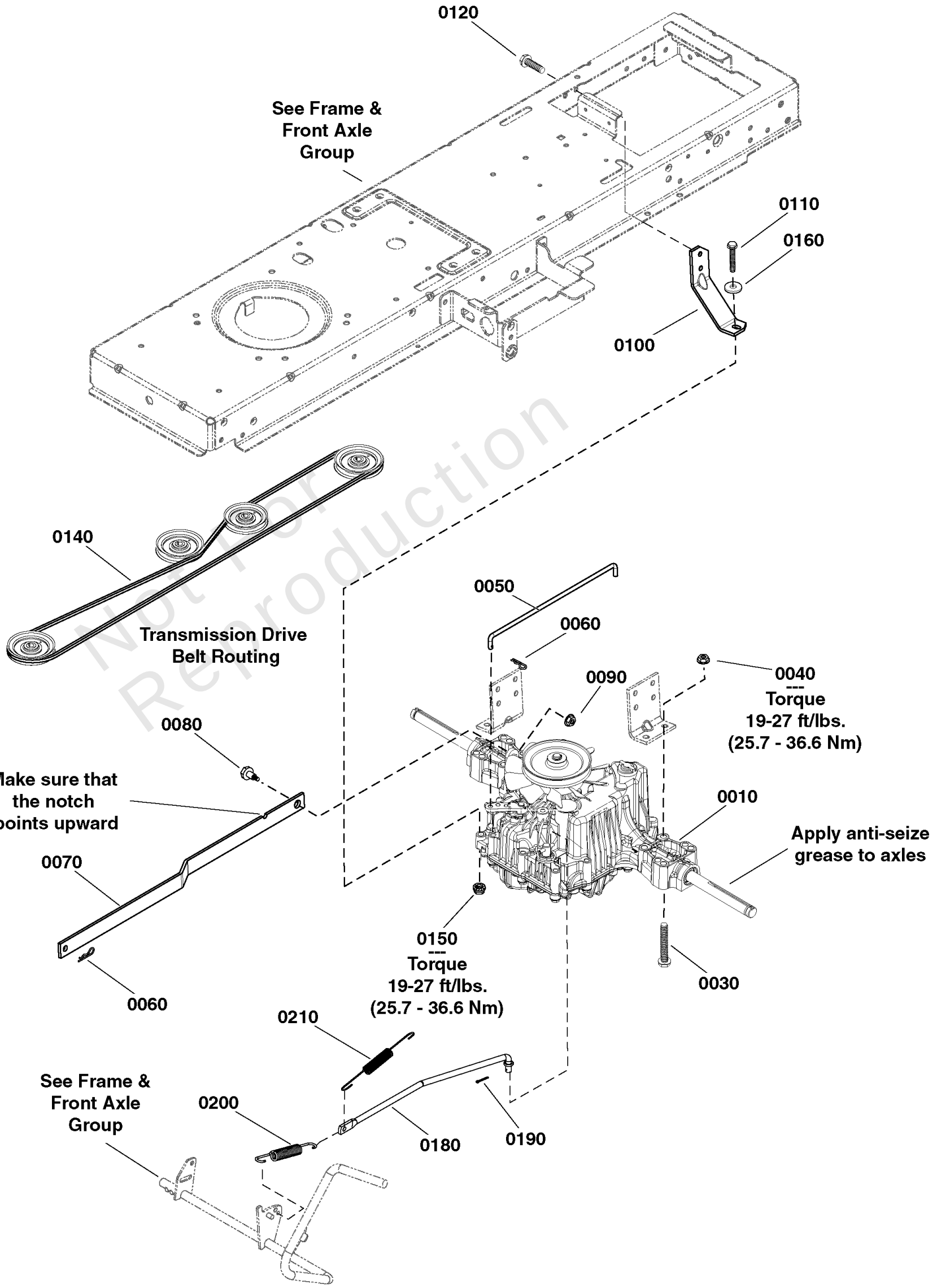

Not for Reproduction

Copyright © Briggs & Stratton. All Rights reserved

Transmission Group

REF NO	PART NO	QTY	DESCRIPTION
0010	1761324YP	1	TRANSMISSION ASSEMBLY, Tuff Torque, K46BP
0030	1960586SM	4	CAPSCREW, Hex Flange, Whiz Lock, 5/16-18 x 2-1/2
0040	1931277SM	4	NUT, Hex Flange Whiz Lock Small, 5/16-18
0050	1728120SM	1	ROD, Bypass, 1/4 x 11 7/16
0060	1722460SM	2	PIN, Hair
0070	1727258ASM	1	ARM, Control
0080	1732426SM	1	BOLT-SHLDR 5/16-18 0.
0090	1935048SM	1	NUT, Hex Flange, Two Way Lock, 5/16-18
0100	1728043ASM	1	STRAP, Torque 7 GA
0110	1922127SM	1	SCREW, Hex Head Cap, 5/16-18 x 1 3/4
0120	1664847SM	1	SCREW, Taptite, 5/16-18 x 3/4
0140	1728008SM	1	V-BELT, HA, 89-1/4" Long
0150	1960686SM	1	NUT, Hex Flange Nylock, 5/16-18
0160	1919381SM	1	WASHER, Flat, .34 ID x 1" OD
0180	1727253SM	1	ROD, Brake, 3/8 Dia. x 15-1/8 Long
0190	1918447SM	1	PIN, Cotter, 15/16 x 3/4
0200	1731262SM	1	SPRING, Extension, 11/16 x 3-3/8
0210	1721995SM	1	SPRING, Extension, 5/8 x 6-5/8

Not For Reproduction

Copyright © Briggs & Stratton. All Rights reserved

Transmission SERVICE PARTS - Tuff Torq K46BP (1729588)

Note: Unless noted otherwise, use the standard torque specifications

Mfg. No: 2691663-02

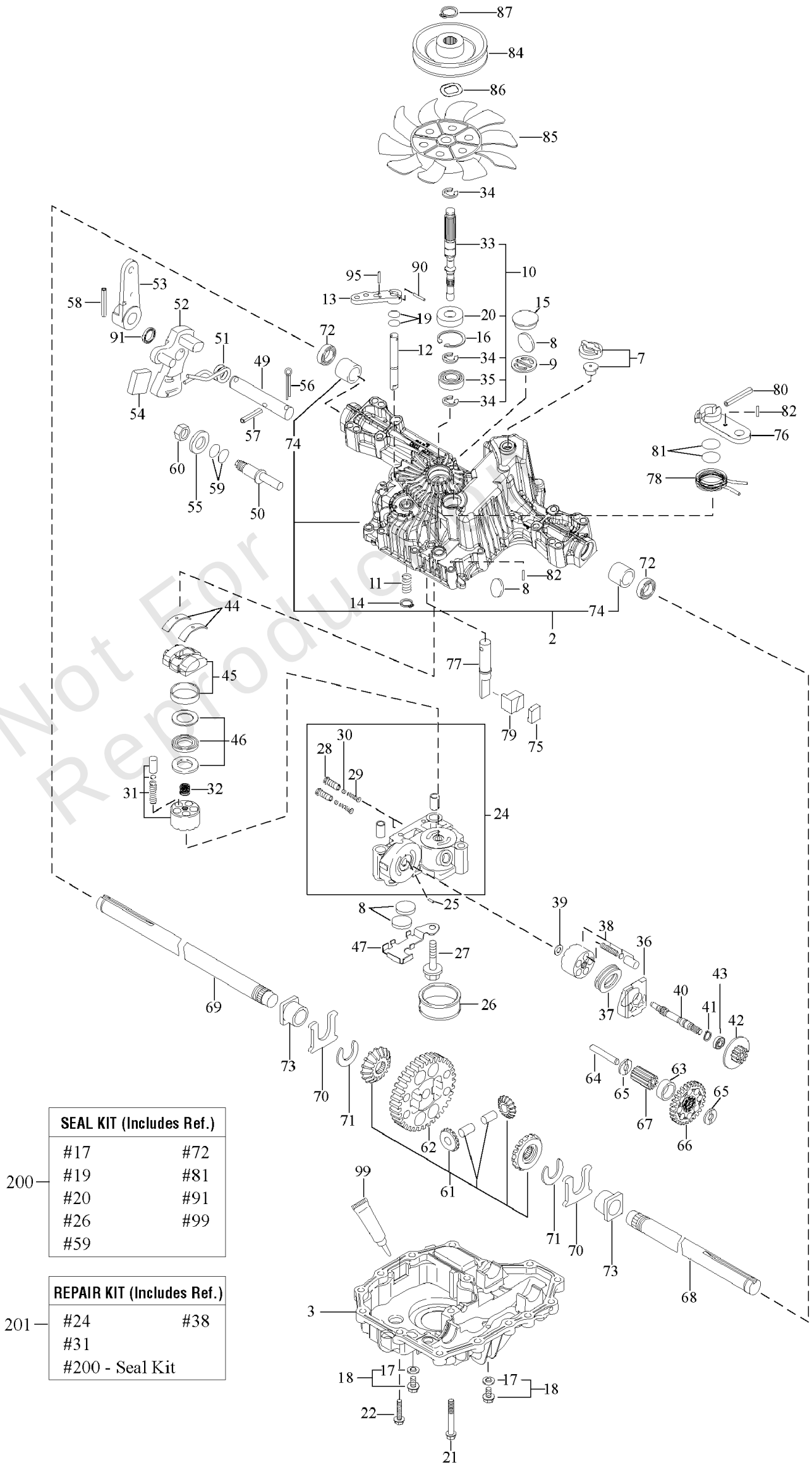

SEAL KIT (Includes Ref.)	
#17	#72
#19	#81
#20	#91
#26	#99
#59	

200

REPAIR KIT (Includes Ref.)	
#24	#38
#31	
#200 - Seal Kit	

201

Not For Reproduction

Copyright © Briggs & Stratton. All Rights reserved

Transmission SERVICE PARTS - Tuff Torq K46BP (1729588)

REF NO	PART NO	QTY	DESCRIPTION
1	1729588SM		TRANSMISSION ASSEMBLY, Tuff Torque, K46BP
2	-----		*KIT, Upper Case
3	-----		*LOWER CASE
7	1718052SM		VENT VALVE 15
8	1724279SM		MAGNET
9	-----		*MAGNET HOLDER
10	-----		*PUMP SHAFT/BEARING KIT
11	-----		SPRING 25
12	1724281SM		BYPASS SHAFT A
13	1720418SM		LEVER, Bypass
14	1718061SM		RING, Snap, 10
15	1724282SM		SEALING CAP, 30
16	1708650SM		RING, Snap, C 35
17	1724323YP		SEAL WASHER, 8
18	-----		KIT, Drain Bolt
21	-----		SCREW, Tapping, 8 * 55
22	1707789SM		SCREW, Tapping, 8 * 30
24	-----		CENTER CASE E W/BALL IDS SERVICE KIT
25	1718070SM		PIN, 3 * 9.8
26	-----		FILTER 105
27	1720805SM		BOLT, 10 * 75
28	-----		IDS VALVE 1.0
29	1724287SM		IDS SPRING
30	-----		BALL, 3/16
31	-----		KIT, Cylinder Block (Pump)
32	1724290SM		SPRING
33	1739892YP		PUMP SHAFT
34	1718076SM		E-RING, 15
35	1708673SM		BEARING, 6202C3
36	1718077SM		MOTOR HOUSING
37	-----		THRUST BEARING 51106
38	1718079SM		KIT, Cylinder Block
39	1718084SM		WASHER, 12 * 24 * 1
40	1724943SM		MOTOR SHAFT
41	1708672SM		RING, Snap, S15
42	1724294SM		BRAKE DISC/MOTOR GEAR (11T)
43	-----		BEARING, 6202 RSR C3
44	1718089SM		THRUST METAL
45	-----		SWASH PLATE CMP
46	1718086SM		THRUST BEARING K81105
49	-----		CONTROL SHAFT
50	-----		FULCRUM
51	-----		SPRING, Torsion
52	-----		CONTROL ARM A
53	1724347SM		CONTROL LEVER C
54	-----		JERKY PLATE
55	1708689SM		WASHER, 12
56	1724349SM		COTTER PIN, 1/8 * 3/4

Not For Reproduction

Footnotes:

Note* See your local authorized dealership for Tuff Torq parts and warranty or contact Tuff Torq at www.tufftorqservices.com (1-866-572-3441 US only / 01-423-585-1977)
Note* See your local authorized dealership for Tuff Torq parts and warranty or contact Tuff Torq at www.tufftorqservices.com (U.S. 1-866-572-3441 / Int'l: 01-423-585-1977)

Copyright © Briggs & Stratton. All Rights reserved

Transmission SERVICE PARTS - Tuff Torq K46BP (1729588)

Note: Unless noted otherwise, use the standard torque specifications

Mfg. No: 2691663-02

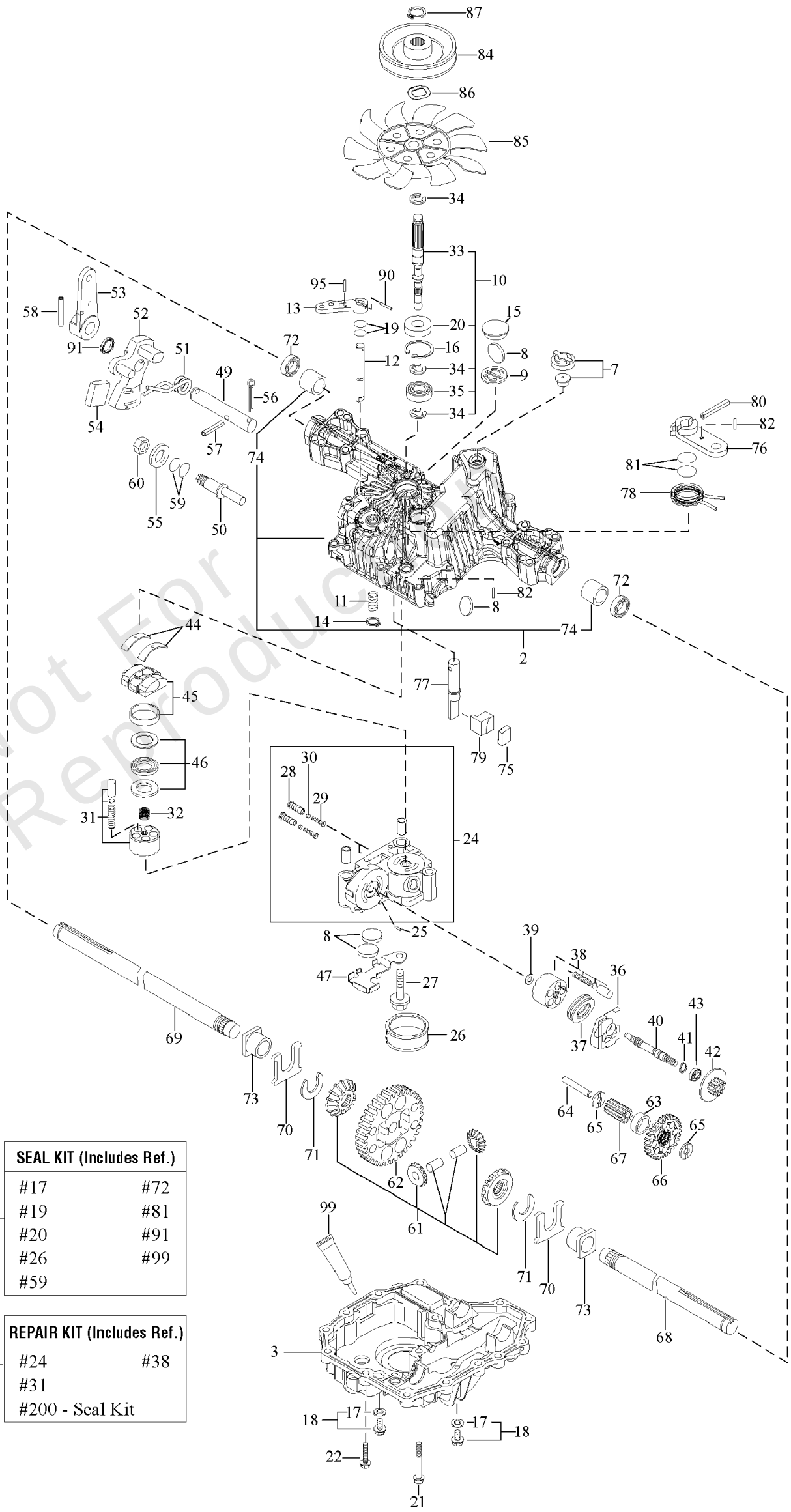

SEAL KIT (Includes Ref.)	
#17	#72
#19	#81
#20	#91
#26	#99
#59	

200

REPAIR KIT (Includes Ref.)	
#24	#38
#31	
#200 - Seal Kit	

201

Not For Reproduction

Copyright © Briggs & Stratton. All Rights reserved

Transmission SERVICE PARTS - Tuff Torq K46BP (1729588)

REF NO	PART NO	QTY	DESCRIPTION
57	1724296SM		SPRING PIN 6 * 36
58	1718100SM		ROLL PIN 6 * 40
60	1708692SM		NUT 12
61	-----		*KIT, Differential Gear
62	-----		*FINAL GEAR (54T)
63	-----		*FINAL PINION COLLAR
64	-----		*REDUCTION SHAFT
65	1724948SM		WASHER, 12 * 32 * 3.2
66	-----		*REDUCTION GEAR (37T)
67	-----		*FINAL PINION GEAR (10T)
68	1724303SM		AXLE SHAFT, Left
69	1724304SM		AXLE SHAFT, Right
70	-----		*THRUST WASHER
71	1718113SM		RING, 17
72	1718111SM		SEAL, 19 * 32 * 8 -(For this part only contact B&S Tech support)
73	1718110SM		BUSHING, 19 * 25
74	-----		*BUSHING, 19.05
75	1724305SM		BRAKE SHOE
76	1724306SM		BRAKE LEVER
77	-----		*BRAKE SHAFT
78	-----		*BRAKE RETURN SPRING
79	1724309SM		BRAKE ACTUATOR
80	1724310SM		SPRING PIN, 5 * 32
82	1724311SM		SPRING PIN 4 * 16
84	1732918SM		PULLEY D
85	1724314SM		FAN, White
86	1724315SM		WASHER, Wave
87	1724316SM		RING, Snap
90	-----		*SPRING PIN 3.0A * 20
95	-----		*SPRING PIN 3.0A * 16
99	-----		*SEALANT
200	1727541YP		K46 & T40 SEAL KIT
201	-----		*REPAIR KIT K46

Not For Production

Footnotes:

Note* See your local authorized dealership for Tuff Torq parts and warranty or contact Tuff Torq at www.tufftorqservices.com (1-866-572-3441 US only / 01-423-585-1977)
Note* See your local authorized dealership for Tuff Torq parts and warranty or contact Tuff Torq at www.tufftorqservices.com (U.S. 1-866-572-3441 / Int'l: 01-423-585-1977)

Copyright © Briggs & Stratton. All Rights reserved

Note: Unless noted otherwise, use the standard torque specifications

Mfg. No: 2691663-02

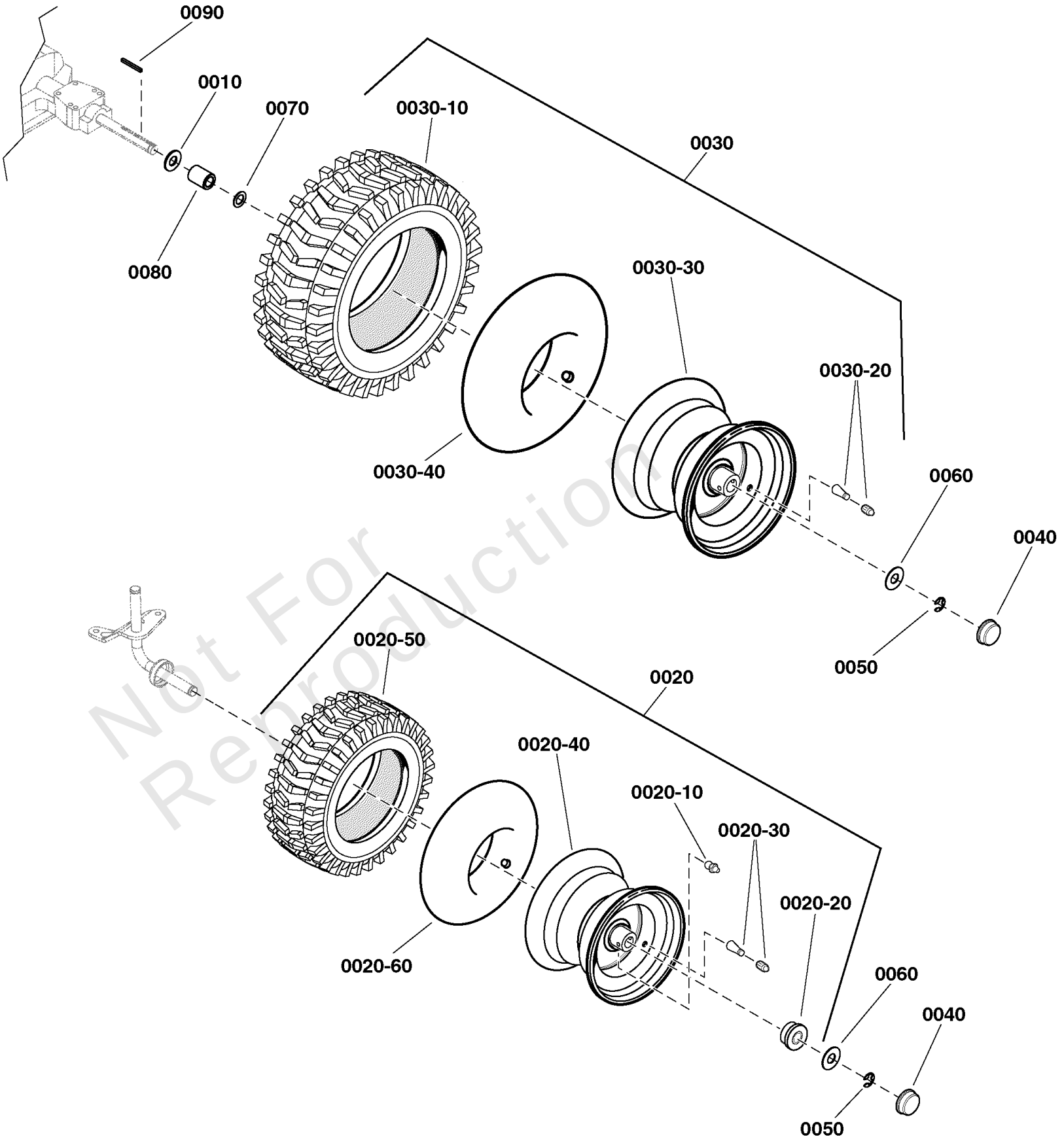

Not For Reproduction

Copyright © Briggs & Stratton. All Rights reserved

Wheels & Tires

REF NO	PART NO	QTY	DESCRIPTION
0010	2860202SM	1	WASHER, 3/4 x 1-5/8 OD x 1/8 Thick
0020	1761503YP	1	WHEEL AND TIRE ASSEMBLY, Front, 15 x 6-6
0020-10	84003425	1	ZERK, Grease Fitting
0020-20	84003424	1	BEARING, Ball
0020-30	2172353SM	1	VALVE STEM & CAP
0020-40	-----	1	Rim -(Refer to Note: *)
0020-50	7101556YP	1	TIRE, 15 x 6 2 Ply K358
0020-60	1664090SM	1	TUBE, Tire, Front
0030	7101563YP	1	ASSY, WHEEL & TIRE
0030-10	7101562YP	2	TIRE, 20 x 10-8, 2 Ply K358
0030-20	2172353SM	1	VALVE STEM & CAP
0030-30	-----	1	RIM -(Refer to Note: *)
0030-40	2164247SM		TUBE, Tire, Rear
0040	094618MA	4	HUB CAP
0050	2827794SM	4	KLIPRING, .75 Dia Shaft
0060	17X195MA	4	WASHER, Flat 1-3/4
0070	17X160MA	2	WASHER, Flat, 3/4 x 1-1/4 x 16
0080	1730181SM	2	SPACER, 3/4 ID x 1-1/4 OD x 1-5/8
0090	021553MA	2	KEY, Square, 3/16

Not For Reproduction

Footnotes:

Note* Not a serviceable part, service wheel complete

Copyright © Briggs & Stratton. All Rights reserved

Hardware Identification & Torque Specifications

Torque Specification Chart

FOR STANDARD METRIC MACHINE HARDWARE (Tolerance ± 20%)

Property Class	5.6 Class 5.6		8.8 Class 8.8		10.9 Class 10.9		12.9 Class 12.9	
Size Of Hardware	*in/lbs* **ft/lbs**	Nm.	*in/lbs* **ft/lbs**	Nm.	*in/lbs* **ft/lbs**	Nm.	*in/lbs* **ft/lbs**	Nm.
M3	*5.88*	*.56*	*13.44*	*1.28*	*19.2*	*1.80*	*22.92*	2.15
M4	*13.44*	*1.28*	*30.72*	*2.90*	*43.44*	*4.10*	*52.56*	4.95
M5	*26.4*	*2.50*	*60.96*	*5.75*	**5.97**	*8.10*	**7.15**	9.7
M6	*44.64*	*4.3*	**7.3**	*9.9*	**10.3**	*14*	**12.1**	16.5
M7	**5.2**	*7.1*	**12.1**	*16.5*	**16.9**	*23*	**19.9**	27
M8	**7.7**	*10.5*	**17.7**	*24*	**25**	*34*	**29**	40
M10	**15**	*21*	**35**	*48*	**50**	*67*	**59**	81
M12	**26**	*36*	**61**	*83*	**86.2**	*117*	**103**	140
M14	**42**	*58*	**101**	*132*	**136**	*185*	**162**	220
M16	**64**	*88*	**147**	*200*	**210**	*285*	**250**	340
M18	**89**	*121*	**202**	*275*	**287**	*390*	**346**	470
M20	**126**	*171*	**290**	*390*	**405**	*550*	**486**	660
M22	**169**	*230*	**390**	*530*	**559**	*745*	**656**	890
M24	**217**	*295*	**497**	*375*	**708**	*960*	**840**	1140
M27	**320**	*435*	**733**	*995*	**1032**	*1400*	**1239**	1680
M30	**435**	*590*	**995**	*1350*	**1401**	*1900*	**1681**	2280
M33	**590**	*800*	**1349**	*1830*	**1902**	*2580*	**2278**	3090
M36	**759**	*1030*	**1740**	*2360*	**2441**	*3310*	**2935**	3980
M39	**988**	*1340*	**2249**	*3050*	**3163**	*4290*	**3798**	5150

The guides and ruler furnished below are designed to help you select the appropriate hardware.

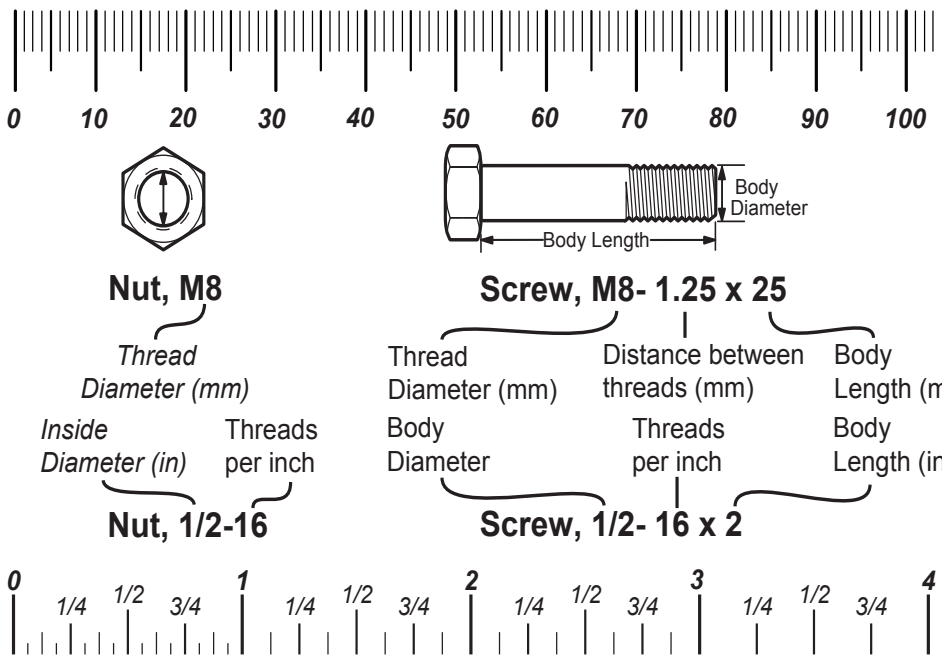

Standard Hardware Sizing

When a washer or nut is identified as **1/2"** (M8), this is the *Nominal size*, meaning the *inside diameter* is 1/2 inch (8mm metric thread diameter); if a second number is present it represents the *threads per inch* (distance between threads).

When bolt or capscrew is identified as **1/2 - 16 x 2"** (M8 - 1.25 x 50), this means the *Nominal size*, or body diameter is 1/2 inch (8mm metric thread diameter), the second number,16, represents the *threads per inch, (distance between threads).* The final number is the body length of the bolt or screw, 2 inches (50mm).

Torque Specification Chart

FOR STANDARD MACHINE HARDWARE (Tolerance ± 20%)

Hardware Grade	No Marks SAE Grade 2		SAE Grade 5		SAE Grade 8	
Size Of Hardware	*in/lbs* **ft/lbs**	Nm.	*in/lbs* **ft/lbs**	Nm.	*in/lbs* **ft/lbs**	Nm.
8-32	*19*	2.1	*30*	3.4	*41*	4.6
8-36	*20*	2.3	*31*	3.5	*43*	4.9
10-24	*27*	3.1	*43*	4.9	*60*	6.8
10-32	*31*	3.5	*49*	5.5	*68*	7.7
1/4-20	*66*	7.6	**8**	10.9	**12**	16.3
1/4-28	*76*	8.6	**10**	13.6	**14**	19.0
5/16-18	**11**	15.0	**17**	23.1	**25**	34.0
5/16-24	**12**	16.3	**19**	25.8	**29**	34.0
3/8-16	**20**	27.2	**30**	40.8	**45**	61.2
3/8-24	**23**	31.3	**35**	47.6	**50**	68.0
7/16-14	**30**	40.8	**50**	68.0	**70**	95.2
7/16-20	**35**	47.6	**55**	74.8	**80**	108.8
1/2-13	**50**	68.0	**75**	102.0	**110**	149.6
1/2-20	**55**	74.8	**90**	122.4	**120**	163.2
9/16-12	**65**	88.4	**110**	149.6	**150**	204.0
9/16-18	**75**	102.0	**120**	163.2	**170**	231.2
5/8-11	**90**	122.4	**150**	204.0	**220**	299.2
5/8-18	**100**	136	**180**	244.8	**240**	326.4
3/4-10	**160**	217.6	**260**	353.6	**386**	525.0
3/4-16	**180**	244.8	**300**	408.0	**420**	571.2
7/8-9	**140**	190.4	**400**	544.0	**600**	816.0
7/8-14	**155**	210.8	**440**	598.4	**660**	897.6
1-8	**220**	299.2	**580**	788.8	**900**	1,244.0
1-12	**240**	326.4	**640**	870.4	**1,000**	1,360.0

NOTES

1. These torque values are to be used for all hardware excluding: locknuts, self-tapping screws, thread forming screws, sheet metal screws and socket head setscrews.
2. Recommended seating torque values for locknuts:
   a. for prevailing torque locknuts - use 65% of grade 5 torques.
   b. for flange whizlock nuts and screws - use 135% of grade 5 torques.
3. Unless otherwise noted on assembly drawings, all torque values must meet this specification.

Common Hardware Types

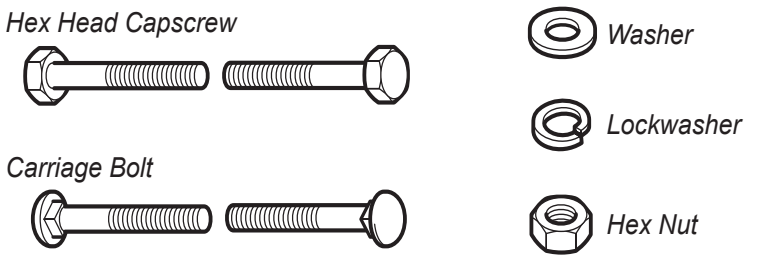

Wrench & Fastener Size Guide

1/4" Bolt or Nut Wrench—7/16"

5/16" Bolt or Nut Wrench—1/2"

3/8" Bolt or Nut Wrench—9/16"

7/16" Bolt or Nut Wrench (Bolt)—5/8" Wrench (Nut)—11/16"

1/2" Bolt or Nut Wrench—3/4"

M6 Bolt or Nut Wrench—10mm

M8 Bolt or Nut Wrench—13mm

M10 Bolt or Nut Wrench—17mm

M12 Bolt or Nut Wrench—19mm

M14 Bolt or Nut Wrench—22 mm

Copyright © Briggs & Stratton. All Rights reserved