Parts Manual

Mfg. No: 190452-2632-01

Copyright © Briggs & Stratton. All Rights reserved

Model Components

	Page
Alternator Chart	4
Blower Hsg,Flywheels,Screen	6
Carb,Mufflers,A/C,Gear Case	10
Carburetor, Air Cleaner Grp	18
Cyl,Crankcase,Piston,Control	22
Electric Starter and Chart	32
Electric Starter and Starter	34
Electric Starters & KeyPanel	36
Fuel Tank Groups, Primer	40
Fuel Tank,Sno-Gard,Primer	44
Replacement Engine - US & Canada	48

Not For Reproduction

Copyright © Briggs & Stratton. All Rights reserved

Mfg. No: 190452-2632-01

AC Only	DC Only	Dual Circuit	Tri-Circuit	5 Amp	10 Amp
23A	23A	23A	23A	23A	23A
474A 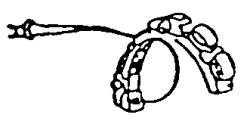	887 877A	474 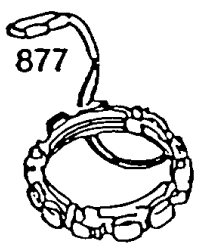 877	474B 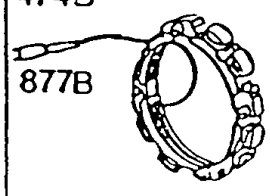 877B	474B 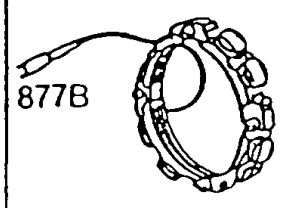 877B	Under Note 474 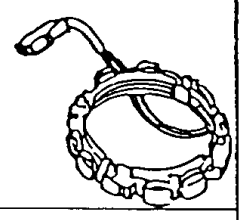
814 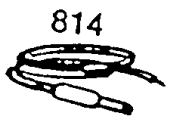	878A 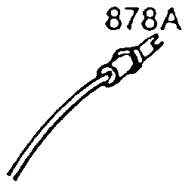	878 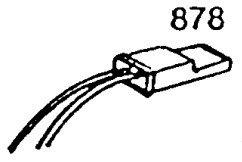	814A 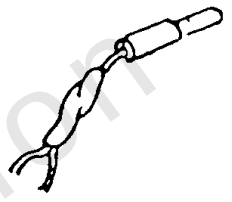	878A 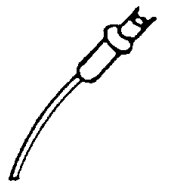	878A 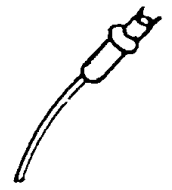
				501A 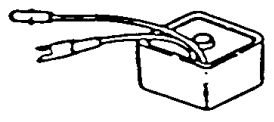	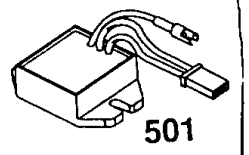 501

Note: All stators use # 482 Mounting Screw.

Not For Reproduction

Copyright © Briggs & Stratton. All Rights reserved

Alternator Chart

REF NO	PART NO	QTY	DESCRIPTION
23A	392034		FLYWHEEL -(Aluminum Ring Gear) For Use Only on Electric Starter Engines WITHOUT ALTERNATOR (Includes Aluminum Ring Gear.)
23A	391983		FLYWHEEL -(Engines With Alternator) For Use on Engines WITH ALTERNATOR. (Includes Aluminum Ring Gear.)
474A	391595		ALTERNATOR -(AC Only)
474B	392595		ALTERNATOR -(Tri Circuit) (9 Amp Regulated)
474	393474		ALTERNATOR -(Dual Circuit)
482	93621		SCREW -(Tapping)
501A	491546		REGULATOR -(9 Amp)
501	394890		REGULATOR -(10, 13, or 16 Amp, Depending on Size of Flywheel Magnets)
814A	392606		HARNESS, Alternator -(Tri Circuit)
814	390867		HARNESS, Alternator -(Ac Only)
877B	393537		WIRE/CONNECTOR, Alternator -(Tri Circuit) (9 Amp)
877A	393814		WIRE/CONNECTOR, Alternator -(10 Amp Regulated)
877	393456		WIRE/CONNECTOR, Alternator
878A	393422		WIRE ASSEMBLY -(Dc Only)
878	393362		HARNESS, Alternator -(Dual Circuit)
887	391529		ALTERNATOR -(DC Only)

Not For Reproduction

Copyright © Briggs & Stratton. All Rights reserved

Blower Hsg,Flywheels,Screen

Mfg. No: 190452-2632-01

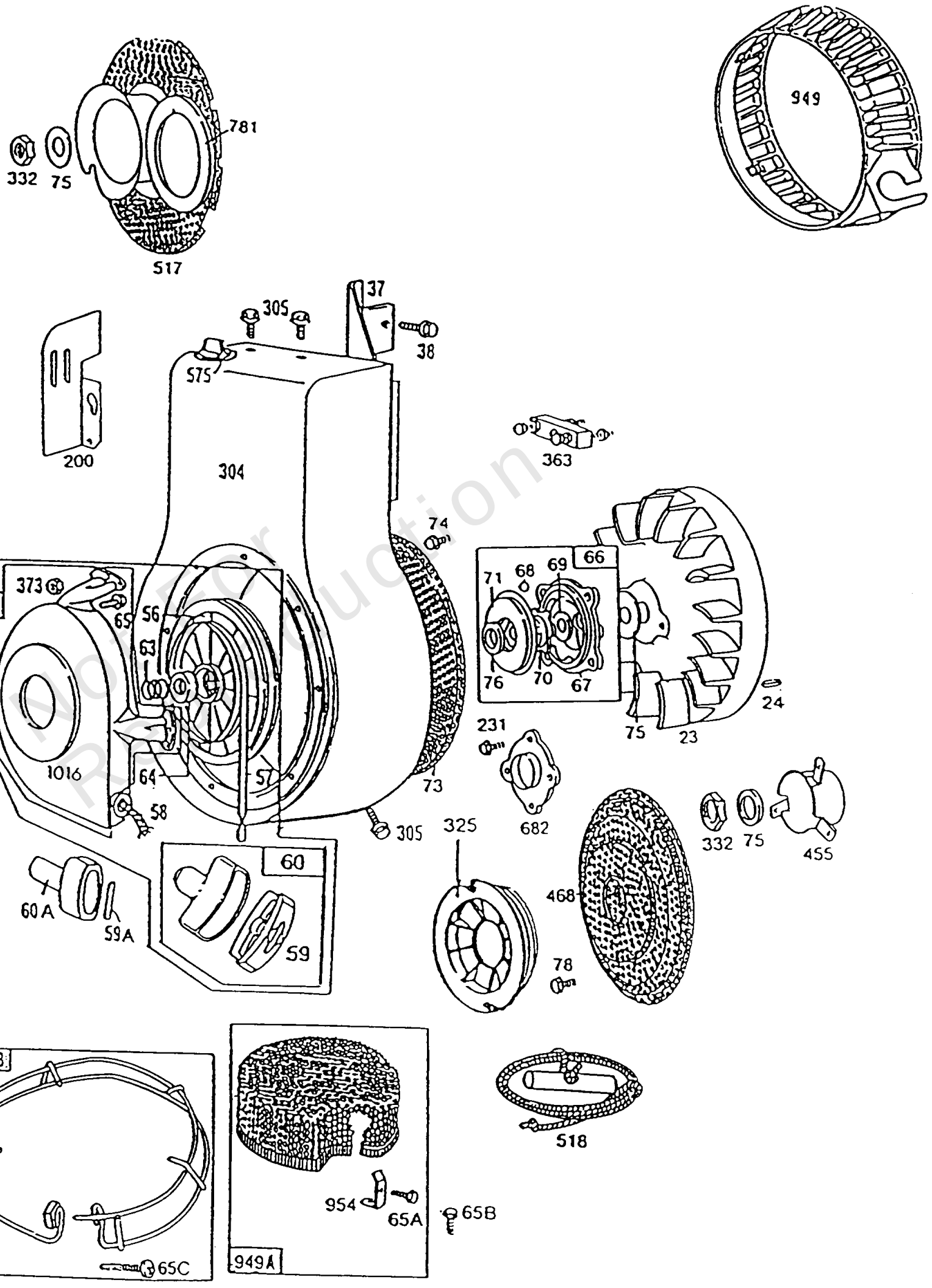

Copyright © Briggs & Stratton. All Rights reserved

Blower Hsg,Flywheels,Screen

REF NO	PART NO	QTY	DESCRIPTION
23	298260		FLYWHEEL
24	222698		KEY, Flywheel
37	222475		GUARD, Flywheel
38	93535		SCREW -(5/16-18 X 3/4)
38	93777		SCREW
55	393576		HOUSING, Rewind Starter
56	295871		PULLEY, Starter -(63 Rope) Includes 63 Rope; if Longer Rope is Required, Order Rope No. 66894 and Cut to Required Length.
57	490179		SPRING-REWIND STR
58	66884		ROPE, Starter -(Cut To Required Length) For Use With Plastic Pulley; if Longer Rope is Needed, Order No. 66894 and Cut to Required Length.
59A	230228		PIN, Starter Grip
59	490653		INSERT, Grip
60A	66728		GRIP, Starter Rope
60	490652		GRIP-STARTER ROPE
63	260414		SPRING, Ratchet
64	230543		ADAPTER, Ratchet Spring
65B	93067		SCREW -(3/8)
65C	94057		SCREW -(Guard Retaining)
65A	94018		SCREW
65	94128		SCREW
66	399671		CLUTCH-STARTER -(Uses Rubber Coated Retainer Washer-Ref. 71)
67	394897		HOUSING, Clutch
68	63770		BALL, Clutch
69	66718		WASHER -(1-1/16 O.D. X 17/32 I.D.) (1 1/16 O.D. X 17/32 I.D.)
70	298799		RATCHET, Clutch -(engine W/Ring Gear on FW equipped for Elec Start)
71	394506		COVER, Ratchet -(Rubber Coated)
73	221796		SCREEN, Rotating
74	93758		SCREW -(Rotating Screen)
75	224061		WASHER -(5/8 Hole)
76	68238		SEAL, Ratchet
78	93805		SCREW
200	221760		GUIDE, Air
231	94238		SCREW
304	399271		HOUSING, Blower -Used After Code Date 86082500
304	491596		HOUSING, Blower
305	93158		SCREW -(1/4-20 X 5/8)
325	280457		PULLEY, Rope Starter
332	92284		NUT -(Flywheel)

Not For Reproduction

Footnotes:

The Following Studs are Used Above Type No. 2799

Copyright © Briggs & Stratton. All Rights reserved

Blower Hsg,Flywheels,Screen

Mfg. No: 190452-2632-01

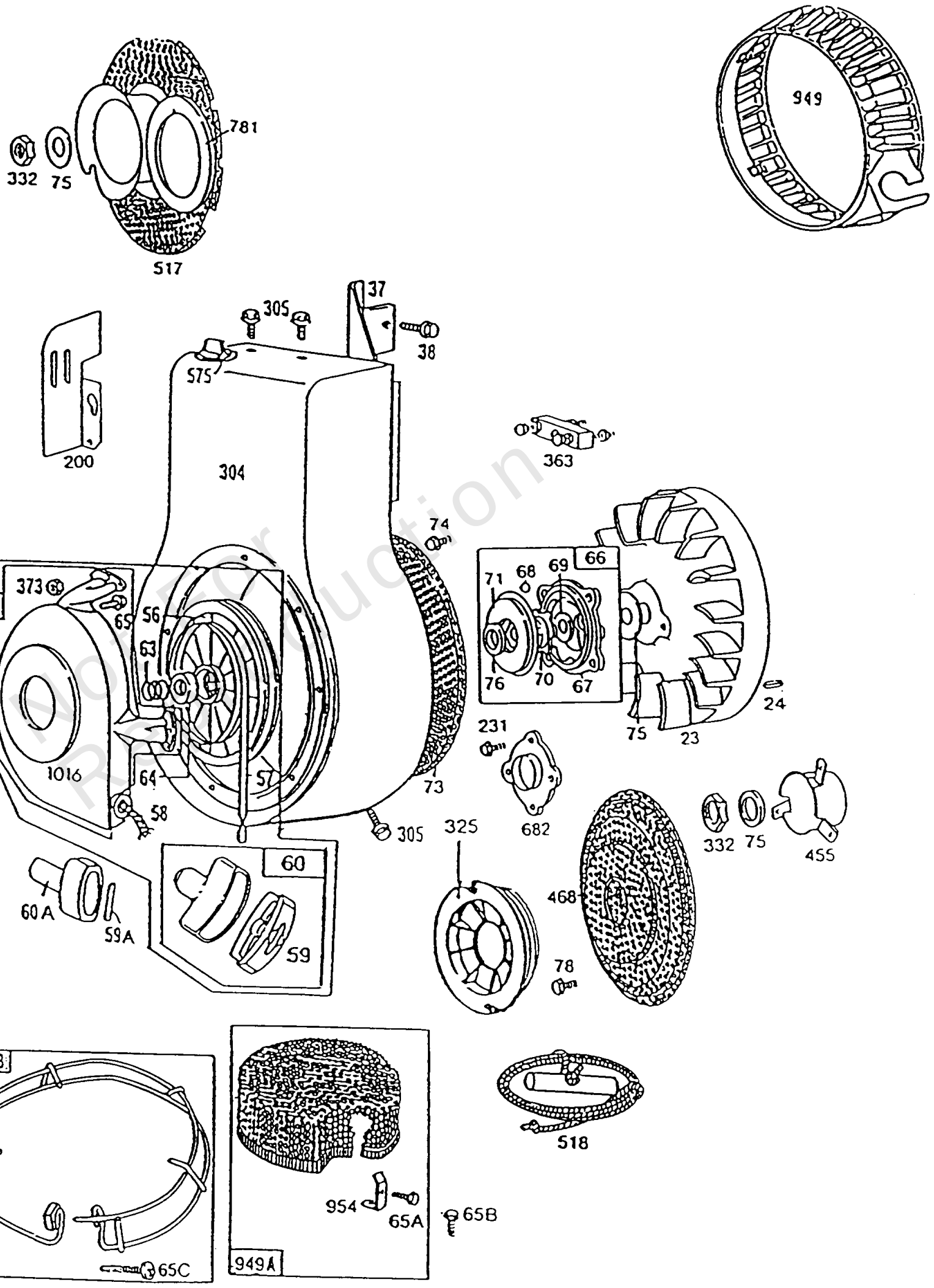

Copyright © Briggs & Stratton. All Rights reserved

Blower Hsg,Flywheels,Screen

REF NO	PART NO	QTY	DESCRIPTION
363	19203		PULLER, Flywheel
373	92987		STARTER, Rewind
455	222561		CUP, Flywheel
468	222302		SCREEN, Rotating -(Stationary) Uses: 231020 Spacer (4) 93572 Screw (8)
468	222562		SCREEN, Rotating
517	210899		PULLEY, Starter
517	295423		PULLEY, Rope Starter
517	299307		PULLEY, Rope Starter -(With Screen)
517	90832		SCREW -(Blower Housing)
517	90931		SCREW
518	69932		GRIP, Starter Rope
575	396691		SWITCH, Rotary -(Mechanical Governor)
608	390391		STARTER, Rewind -For Starter Assy. With Longer Than Standard Rope-Order No. 299640
655	222598		ANCHOR, Rewind Spring -(Stamped Rewind Housing)
682	211516		SHIELD, Starter
781	280068		CAP, Starter Pulley
949A	397530		GUARD, Debris Screen -(Rewind Starter)
949B	396581		GUARD, Rewind
949	280685		GUARD, Rewind
954	223379		BRACKET, Mounting -Uses: 94128 Screw-Hex. Hd. (Mounts Bracket to Blower Housing)
1016	490817		SPACER-REWIND -(Rewind)

Not For Reproduction

Footnotes:

The Following Studs are Used Above Type No. 2799

Copyright © Briggs & Stratton. All Rights reserved

Mfg. No: 190452-2632-01

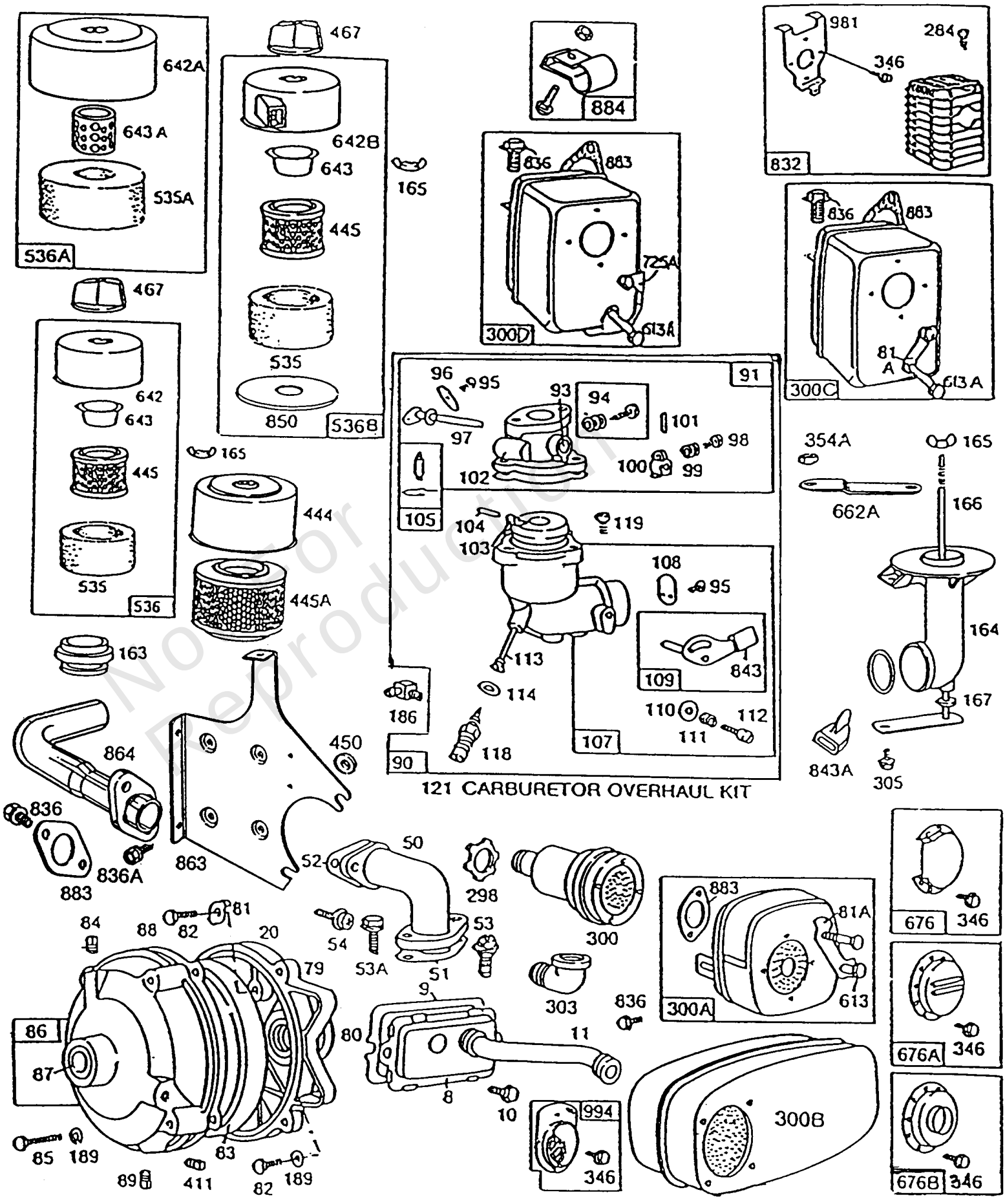

Not for reproduction

Copyright © Briggs & Stratton. All Rights reserved

Carb,Mufflers,A/C,Gear Case

REF NO	PART NO	QTY	DESCRIPTION
8	390321		BREATHER ASSEMBLY
9	27803		GASKET, Rocker Cover -Included in Gasket Set-Part No. 299577
10	94621		SCREW -(Breather Assembly)
11	280267		TUBE, Breather -(Used with Nylon Air Cleaner Pipe)
20	391086		SEAL, Oil -Included in Gasket Set-Part No. 299577
50	212488		MANIFOLD, Intake
51	270684		GASKET, Intake -Included in Gasket Set-Part No. 299577
52	27828		GASKET, Intake -Included in Gasket Set-Part No. 299577
53A	93357		SCREW
53	93956		SCREW
54	93208		SCREW -(Intake Manifold)
79	296179		CASE, Gear Reduction
80	27884		GASKET, Gear Cover/Housing
81A	222263		LOCK, Muffler Screw -(3/8 Diameter Bolt Holes)
81	220234		LOCK, Muffler Screw
82	92502		SCREW
83	296298		SHAFT, Auxiliary Drive
84	92617		SCREW -(Gear Case)
85	91386		SCREW -(2)
86	296053		COVER, Gear
87	391086		SEAL, Oil -(Magneto Side)
88	27328		GASKET, Gear Cover/Housing
89	91488		PLUG -(1/8)
90	390323		CARBURETOR -(Manual Choke)
91	390404		BODY, Upper Carburetor -Used Before Code Date 84100800
91	399443		BODY, Upper Carburetor -Used After Code Date 84100700
93	23108		BUSHING, Throttle Shaft
94	292681		VALVE, Idle Mixture -Included in Carburetor Overhaul Kit-See Ref. 121. Included in Carburetor Overhaul Kit-Part No. 492024
95	93499		SCREW -(Throttle Valve)
96	223370		VALVE, Throttle
97	298826		SHAFT, Throttle
98	91920		SCREW -(8-32 X 5/8)
99	26157		SPRING, Compression

Not For Reproduction

Footnotes:

Uses: 94153 Screw-Guard and Retainer Mounting
The Following Studs are Used Above Type No. 2799
Included in Carburetor Overhaul Kit-See Ref 121

Copyright © Briggs & Stratton. All Rights reserved

Mfg. No: 190452-2632-01

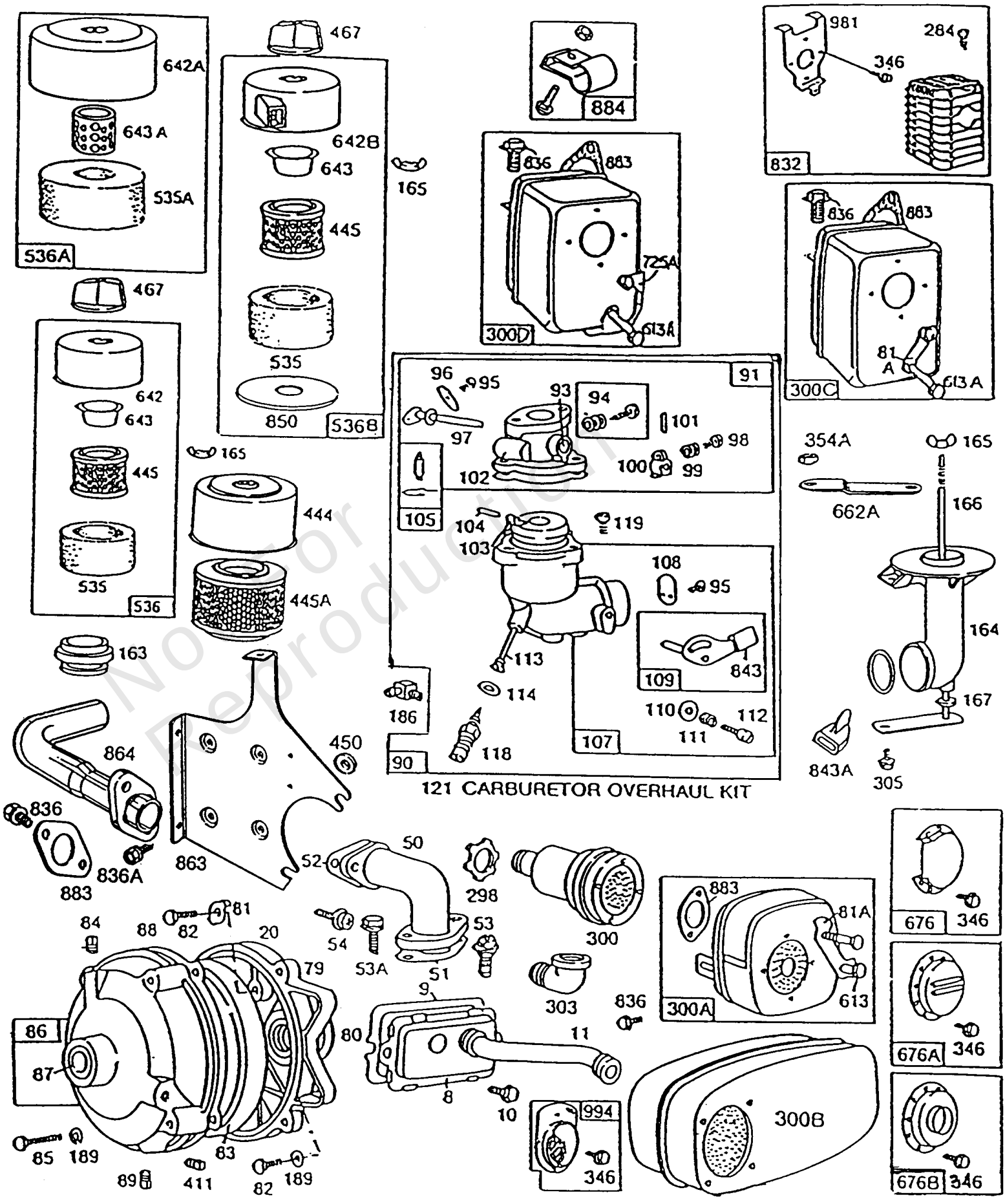

Not for reproduction

Copyright © Briggs & Stratton. All Rights reserved

Carb,Mufflers,A/C,Gear Case

REF NO	PART NO	QTY	DESCRIPTION
100	212904		STOP, Throttle
101	93043		PIN, Shaft
102	27918		GASKET, Carburetor Body -Included in Carburetor Overhaul Kit-See Ref 121
103	99333		FLOAT, Carburetor
104	230896		PIN, Float Hinge -Included in Carburetor Overhaul Kit-See Ref 121. Included in Carburetor Overhaul Kit-Part No. 492024
105	394681		KIT, Needle/Seat -(Gravity Feed) Included in Carburetor Overhaul Kit-See Ref 121. Included in Carburetor Overhaul Kit-Part No. 492024
105	394682		KIT, Needle/Seat -(Gravity Feed)
105	394683		KIT, Needle/Seat -(Pump Feed)
107	299170		BODY, Lower Carburetor -Used Before Code Date 84100800
107	399442		BODY, Lower Carburetor -Used After Code Date 84100700
107	399444		BODY, Lower Carburetor -(Choke-A-Matic) -Used After Code Date 84100700
108	221835		VALVE, Choke -Used Before Code Date 84100800
108	62872		VALVE, Choke -Used After Code Date 84100700
109	391987		SHAFT, Choke -(Manual)
109	396700		SHAFT, Choke -(Choke-A-Matic) -Used After Code Date 83121500
110	222712		WASHER
111	26155		SPRING, Friction
112	23123		SCREW
113	398039		NOZZLE, Carburetor -Used Before Code Date 84100800
113	398202		NOZZLE, Carburetor -Used After Code Date 84100700
114	68667		WASHER -(Viton Seat) Included in Carburetor Overhaul Kit-See Ref. 121. Included in Carburetor Overhaul Kit-Part No. 492024
118	99525		VALVE, High Speed -Included in Carburetor Overhaul Kit-See Ref. 121. Included in Carburetor Overhaul Kit-Part No. 492024. Includes: 22235 Washer-Brass 26336 Spring 65978 O-Ring 394033 Valve-Needle
119	94152		SCREW -(Upper To Lower Carburetor Body)
121	394693		KIT, Carburetor Overhaul -Used Before Code Date 84100800
121	398235		KIT, Carburetor Overhaul -Used After Code Date 84100700
163	27907		GASKET, Air Cleaner
164	398592		ELBOW, Intake -Uses: 271265 O-Ring
165	94289		NUT

Footnotes:

Uses: 94153 Screw-Guard and Retainer Mounting
The Following Studs are Used Above Type No. 2799
Included in Carburetor Overhaul Kit-See Ref 121

Copyright © Briggs & Stratton. All Rights reserved

Mfg. No: 190452-2632-01

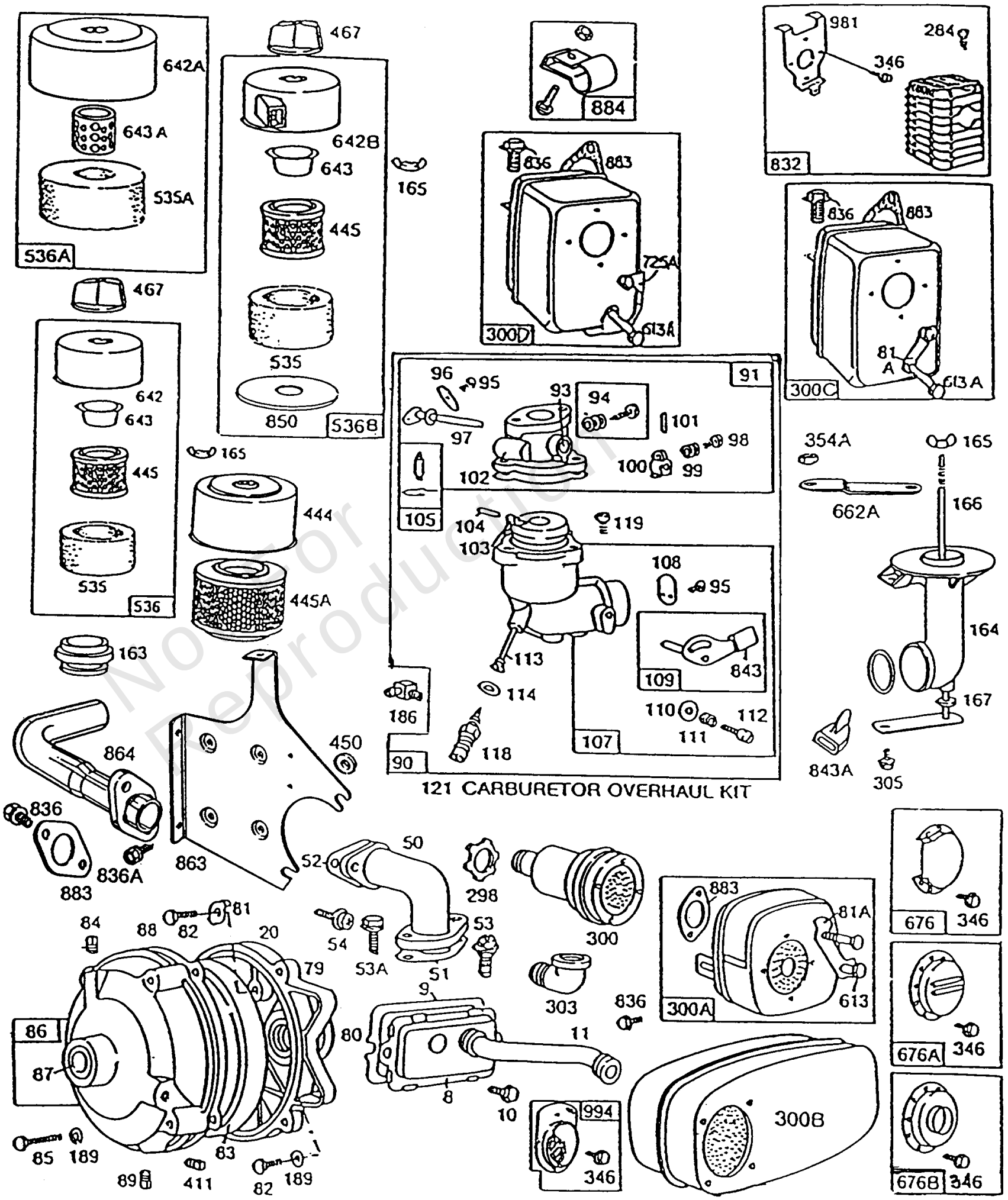

Copyright © Briggs & Stratton. All Rights reserved

Carb,Mufflers,A/C,Gear Case

REF NO	PART NO	QTY	DESCRIPTION
166	390325		STUD -The Following Studs are Used Below Type No. 2800
166	392105		STRAP/STUD, Air Cleaner Mounting -The Following Studs are Used Above Type No. 2799
167	65978		SEAL, O-Ring -(Needle Valve)
186	67218		CONNECTOR, Hose
189	90366		WASHER
284	93572		SCREW -(10-32 X 3/8)
298	261409		LOCKNUT -(Muffler and Elbow)
300A	93587		SCREW -(1/4-20 X 1) -Used Before Code Date 88090300
300A	492337		GUARD, Muffler -Used After Code Date 88090200
300D	399355		MUFFLER
300B	392101		MUFFLER -(Super Lo Tone)
300A	93606		SCREW
300C	398200		MUFFLER
300A	391313		MUFFLER
300	393010		MUFFLER -(Round Lo Tone)
303	91246		ELBOW, Exhaust -(45 Degree)
305	93158		SCREW -(1/4-20 X 5/8)
346	93705		SCREW -(8-32 X 3/8)
354A	94314		NUT
411	93448		PLUG, Oil Drain -(Flush) (1/4-18 NPTF) (Flush) (1/4 18 NPTF)
444	390588		COVER, Air Cleaner
445A	390492		FILTER, A/C Cartridge
445	393957		FILTER, A/C Cartridge
450	93852		WASHER
467	493903		KNOB, Air Cleaner Cover
535A	270093		FILTER, Air Cleaner Foam
535	271794		FILTER, Air Cleaner Foam
536B	399810		CLEANER, Air -Used After Code Date 85060600
536A	390400		CLEANER, Air
536	391063		CLEANER, Air -For Dual Element Air Cleaner Kit Order Part No. 393459. Used With Standard Air Cleaner Pipe Assembly.
613A	94054		SCREW -(Muffler)
613	93704		SCREW -(Muffler) -Used Before Code Date 82091300
613	94042		SCREW -(Muffler) -Used After Code Date 82091400

Footnotes:

Uses: 94153 Screw-Guard and Retainer Mounting
The Following Studs are Used Above Type No. 2799
Included in Carburetor Overhaul Kit-See Ref 121

Not For Reproduction

Copyright © Briggs & Stratton. All Rights reserved

Mfg. No: 190452-2632-01

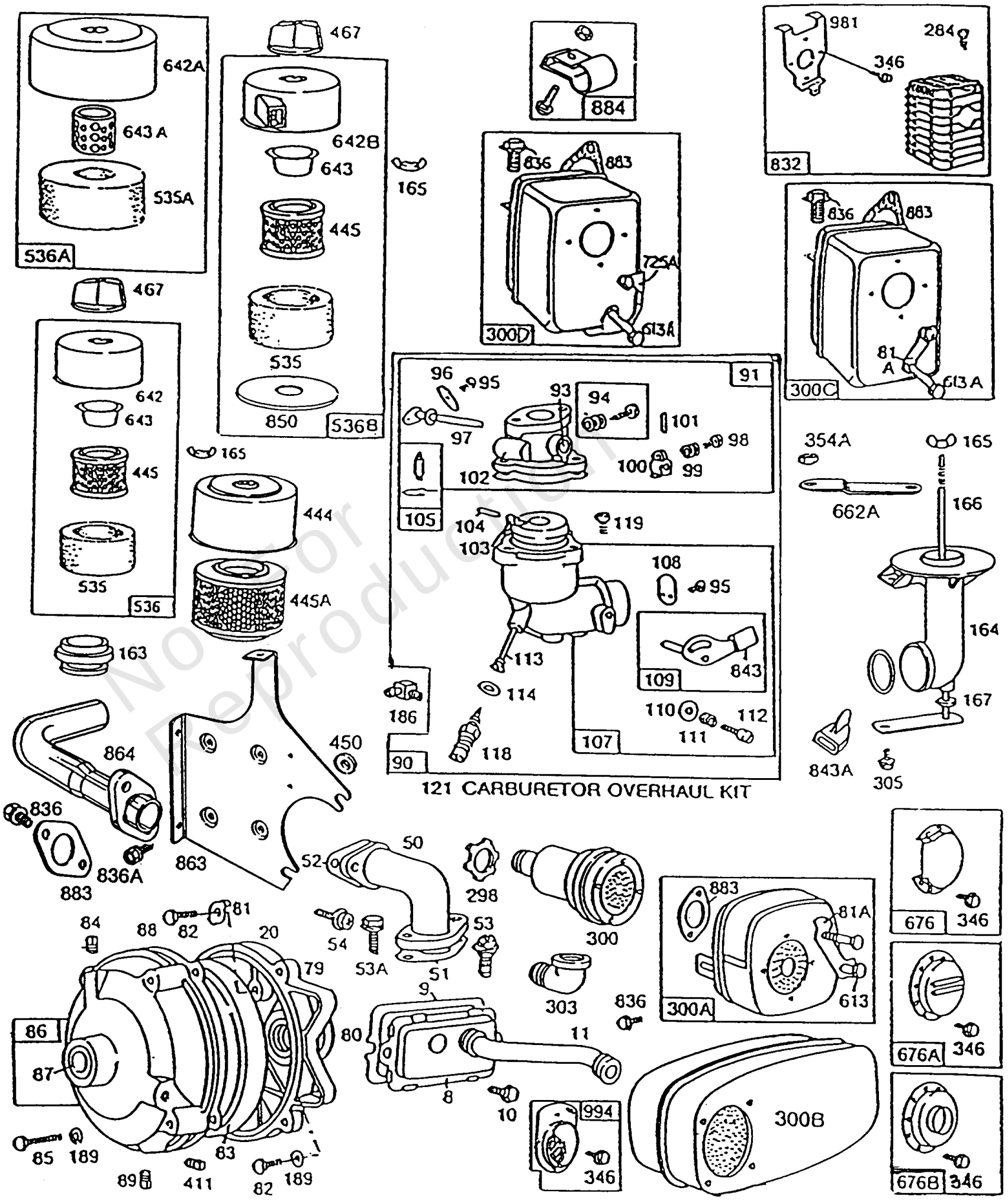

Copyright © Briggs & Stratton. All Rights reserved

Carb,Mufflers,A/C,Gear Case

REF NO	PART NO	QTY	DESCRIPTION
642B	398462		COVER, Air Cleaner
642A	221468		COVER, Air Cleaner
642	222271		COVER, Air Cleaner
643A	280001		SUPPORT, Foam Element
643	222272		RETAINER, Air Filter
662A	224484		BRACE, Air Cleanr
676B	395700		DEFLECTOR, Muffler -(Direct Outlet)
676A	393758		DEFLECTOR, Muffler -(Louvered Outlet)
676	393757		DEFLECTOR, Muffler -(Side Outlet)
725A	223645		SHIELD, Heat
832	398779		GUARD, Muffler
836A	94608		SCREW -(Fuel Shut Off)
836	93559		SCREW -(Tank) (Fuel Tank)
843A	280147		KNOB, Control -(Sno gard)
843	280149		SLEEVE, Lever
850	271793		GASKET, Air Cleaner
863	224479		BRACKET, Muffler
864	494009		MANIFOLD, Exhaust
883	270918		GASKET, Exhaust
884	392649		CLAMP, Muffler -(Muffler 493963)
981	223373		BRACKET, Muffler Guard
994	399541		ARRESTOR, Spark

Not For Reproduction

Footnotes:

Uses: 94153 Screw-Guard and Retainer Mounting
The Following Studs are Used Above Type No. 2799
Included in Carburetor Overhaul Kit-See Ref 121

Copyright © Briggs & Stratton. All Rights reserved

Mfg. No: 190452-2632-01

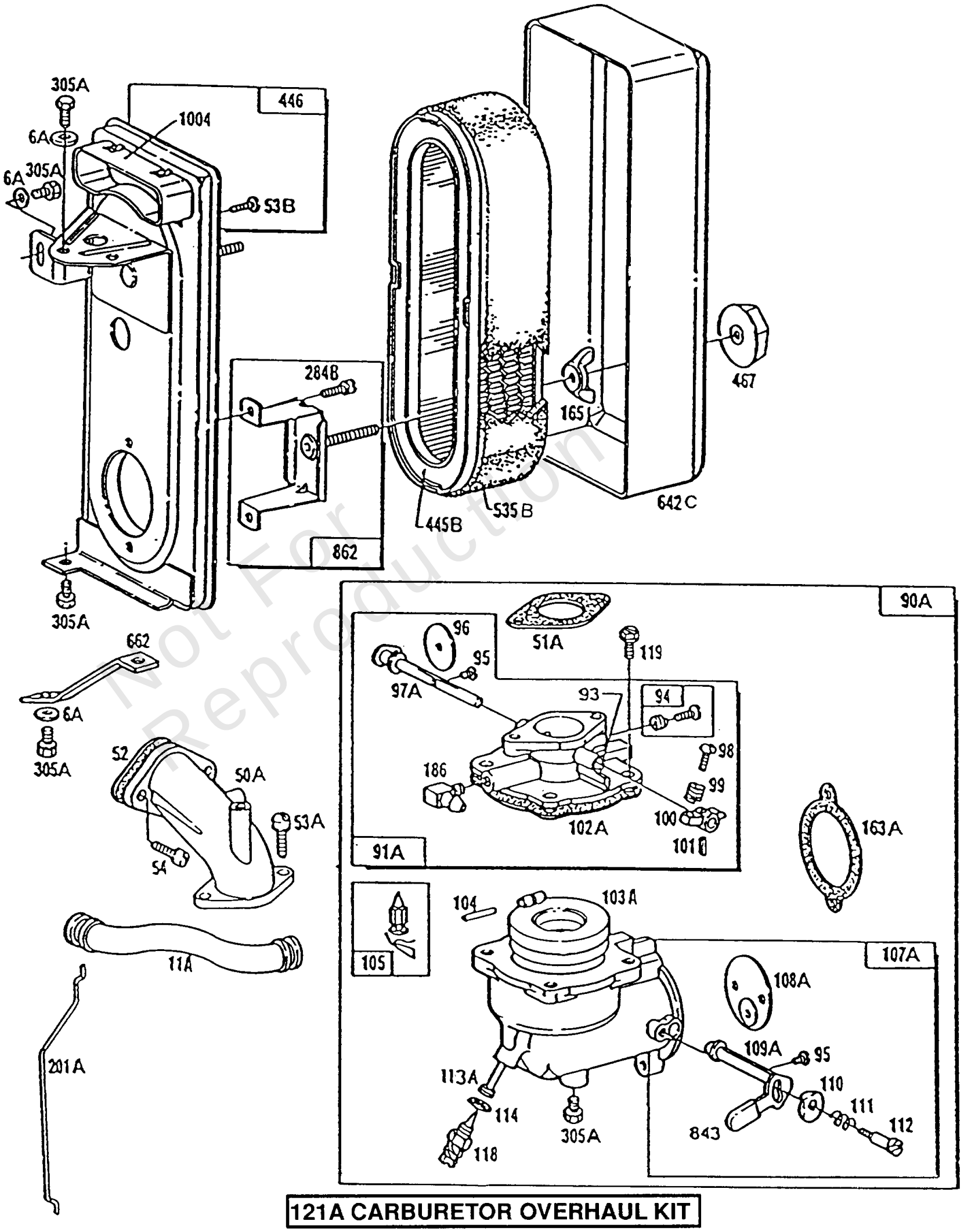

121A CARBURETOR OVERHAUL KIT

Not For Reproduction

Copyright © Briggs & Stratton. All Rights reserved

Carburetor, Air Cleaner Grp

REF NO	PART NO	QTY	DESCRIPTION
6A	62199		WASHER
11A	280716		TUBE, Breather
50A	213169		MANIFOLD, Intake
51A	270267		GASKET, Intake -Included in Carburetor Overhaul Kit-Part No. 492024
52	27828		GASKET, Intake -Included in Gasket Set-Part No. 299577
53A	93357		SCREW
53B	94073		SCREW
54	93208		SCREW -(Intake Manifold)
90A	490419		CARBURETOR
91A	491560		BODY, Upper Carburetor
93	23108		BUSHING, Throttle Shaft
94	292681		VALVE, Idle Mixture -Included in Carburetor Overhaul Kit-See Ref. 121. Included in Carburetor Overhaul Kit-Part No. 492024
95	93499		SCREW -(Throttle Valve)
96	223370		VALVE, Throttle
97A	491484		SHAFT, Throttle
98	91920		SCREW -(8-32 X 5/8)
99	26157		SPRING, Compression
100	212904		STOP, Throttle
101	93043		PIN, Shaft
102A	270268		GASKET, Carburetor Body -Included in Carburetor Overhaul Kit-Part No. 492024
103A	298514		FLOAT, Carburetor
104	230896		PIN, Float Hinge -Included in Carburetor Overhaul Kit-See Ref 121. Included in Carburetor Overhaul Kit-Part No. 492024
105	394681		KIT, Needle/Seat -(Gravity Feed) Included in Carburetor Overhaul Kit-See Ref 121. Included in Carburetor Overhaul Kit-Part No. 492024
105	394682		KIT, Needle/Seat -(Gravity Feed)
105	394683		KIT, Needle/Seat -(Pump Feed)
107A	490422		BODY, Lower Carburetor
108A	391836		VALVE, Choke
109A	490068		SHAFT, Choke
110	222712		WASHER
111	26155		SPRING, Friction
112	23123		SCREW
113A	491520		NOZZLE, Carburetor -Included in Carburetor Overhaul Kit-Part No. 492024
114	68667		WASHER -(Viton Seat) Included in Carburetor Overhaul Kit-See Ref. 121. Included in Carburetor Overhaul Kit-Part No. 492024

Not For Reproduction

Footnotes:

The Following Studs are Used Above Type No. 2799
Included in Carburetor Overhaul Kit-See Ref 121

Copyright © Briggs & Stratton. All Rights reserved

Mfg. No: 190452-2632-01

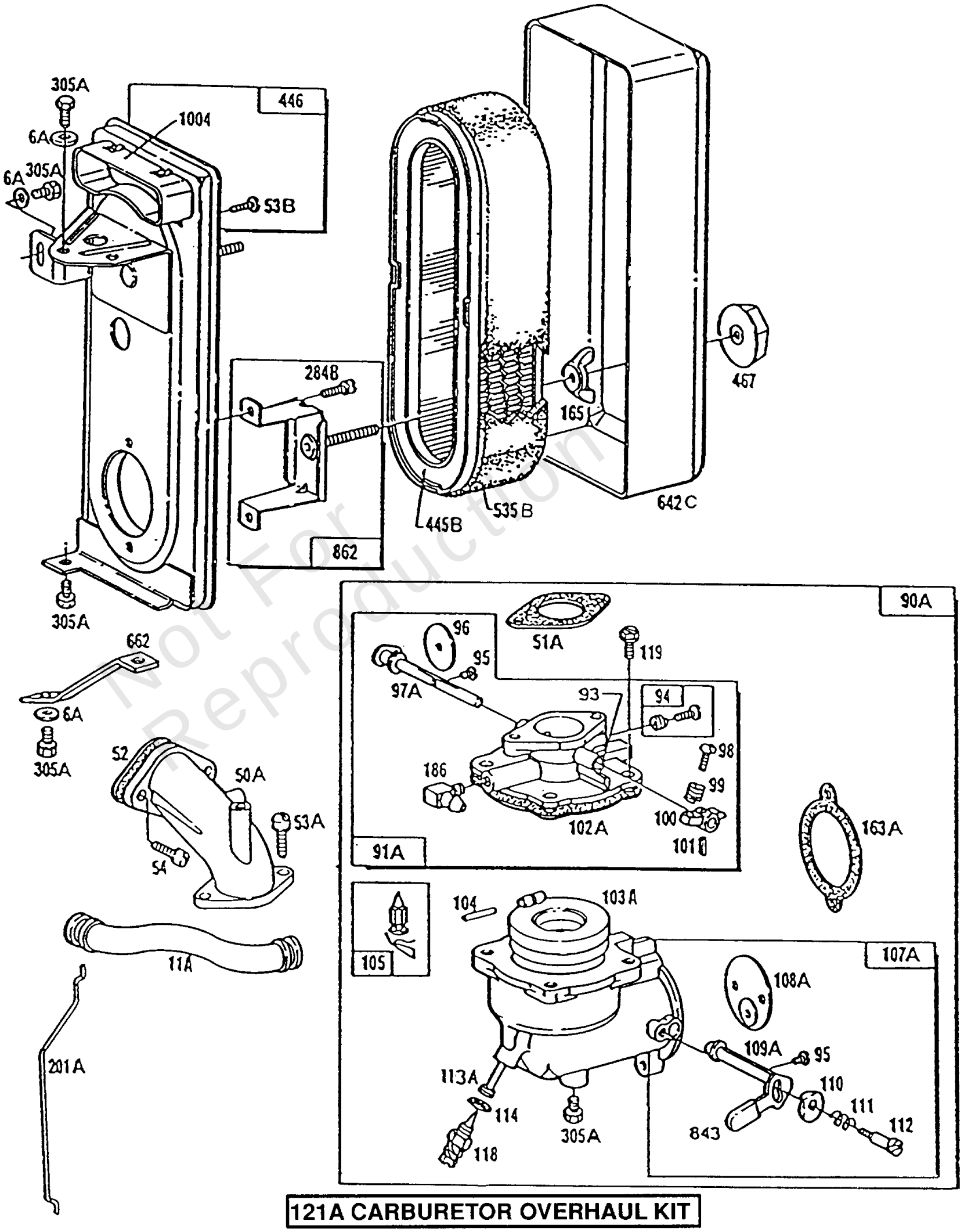

121A CARBURETOR OVERHAUL KIT

Not For Reproduction

Copyright © Briggs & Stratton. All Rights reserved

Carburetor, Air Cleaner Grp

REF NO	PART NO	QTY	DESCRIPTION
118	99525		VALVE, High Speed -Included in Carburetor Overhaul Kit-See Ref. 121. Included in Carburetor Overhaul Kit-Part No. 492024. Includes: 22235 Washer-Brass 26336 Spring 65978 O-Ring 394033 Valve-Needle
119	94152		SCREW -(Upper To Lower Carburetor Body)
121A	492024		KIT, Carburetor Overhaul
163A	271910		GASKET, Air Cleaner
165	94289		NUT
186	67218		CONNECTOR, Hose
201A	262307		LINK, Throttle
284B	94271		SCREW
305A	93559		SCREW -(Tank) (Fuel Tank)
445B	399968		FILTER, A/C Cartridge
446	490430		BASE, Air Cleaner
467	493903		KNOB, Air Cleaner Cover
535B	271939		FILTER, A/C Cartridge
642C	223751		COVER, Air Cleaner
662	223820		BRACKET, Support
843	280149		SLEEVE, Lever
862	490431		STRAP/STUD, Air Cleaner Mounting
1004	280718		DUCT, Air

Not For Reproduction

Footnotes:

The Following Studs are Used Above Type No. 2799
Included in Carburetor Overhaul Kit-See Ref 121

Copyright © Briggs & Stratton. All Rights reserved

Mfg. No: 190452-2632-01

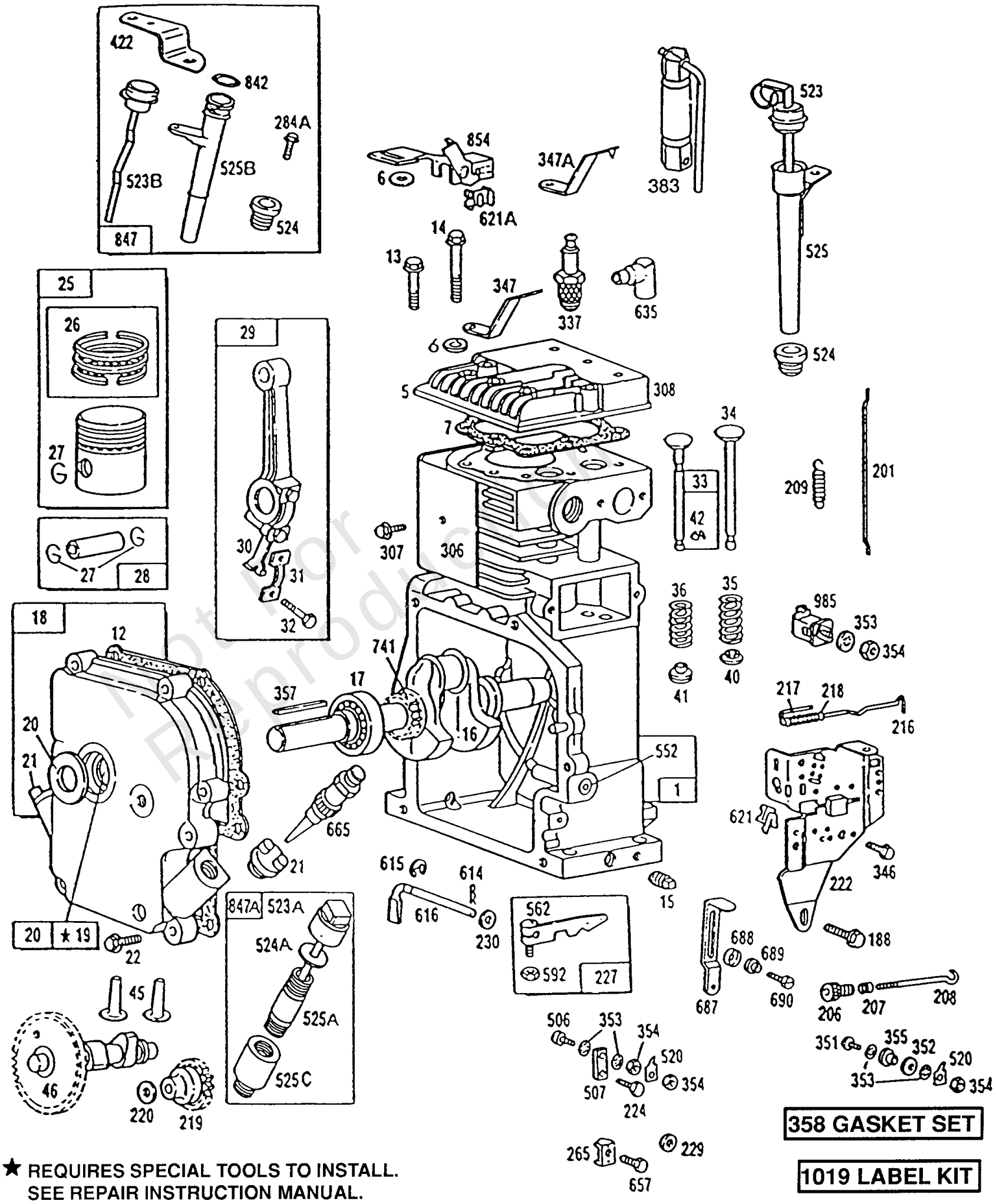

★ REQUIRES SPECIAL TOOLS TO INSTALL.
SEE REPAIR INSTRUCTION MANUAL.

358 GASKET SET

1019 LABEL KIT

Copyright © Briggs & Stratton. All Rights reserved

Cyl,Crankcase,Piston,Control

REF NO	PART NO	QTY	DESCRIPTION
1	396178		CYLINDER ASSEMBLY
1	399556		CYLINDER ASSEMBLY -(Oil Guard)
5	212286		HEAD, Cylinder
6	22963		WASHER
7	270430		GASKET, Cylinder Head -Included in Gasket Set-Part No. 299577
12	271701		GASKET, Crankcase -(.015) Included in Gasket Set-Part No. 299577
12	27876		GASKET, Crankcase -(.005) Included in Gasket Set-Part No. 299577
12	27877		GASKET, Crankcase -(.009) Included in Gasket Set-Part No. 299577
13	93776		STUD -(Cylinder Head)
13	94565		SCREW -(Cylinder Head) (3 9/16)
14	93723		SCREW -(3)
14	93776		STUD -(Cylinder Head)
14	93781		STUD -(3 15/16)
15	91084		PLUG, Oil Drain -(3/8)
15	92738		PLUG, Oil Drain -Use One on Engines with OIL GARD
15	93418		PLUG, Oil Drain -(Flush)
15	93978		PLUG, Oil Drain
16	492459		CRANKSHAFT
17	29530		BEARING, Ball
18	299175		COVER, Crankcase
19	295964		KIT, Bushing/Seal -(PTO Side)
20	391086		SEAL, Oil -Included in Gasket Set-Part No. 299577
21	66768		PLUG, Oil
22	93585		SCREW -(Crankcase Cover)
22	93685		SCREW
22	93730		STUD
25	391673		PISTON ASSEMBLY -(Standard)
25	391674		PISTON ASSEMBLY -(.010 Oversize)
25	391675		PISTON ASSEMBLY -(.020 Oversize)
25	391676		PISTON ASSEMBLY -(.030 Oversize)
26	299743		SET, Ring -(.030 Oversize Chrome)
26	391669		SET, Ring -(Standard)
26	391670		SET, Ring -(.010 Oversize)

Not For Reproduction

Footnotes:

The Following Studs are Used Above Type No. 2799

Copyright © Briggs & Stratton. All Rights reserved

Mfg. No: 190452-2632-01

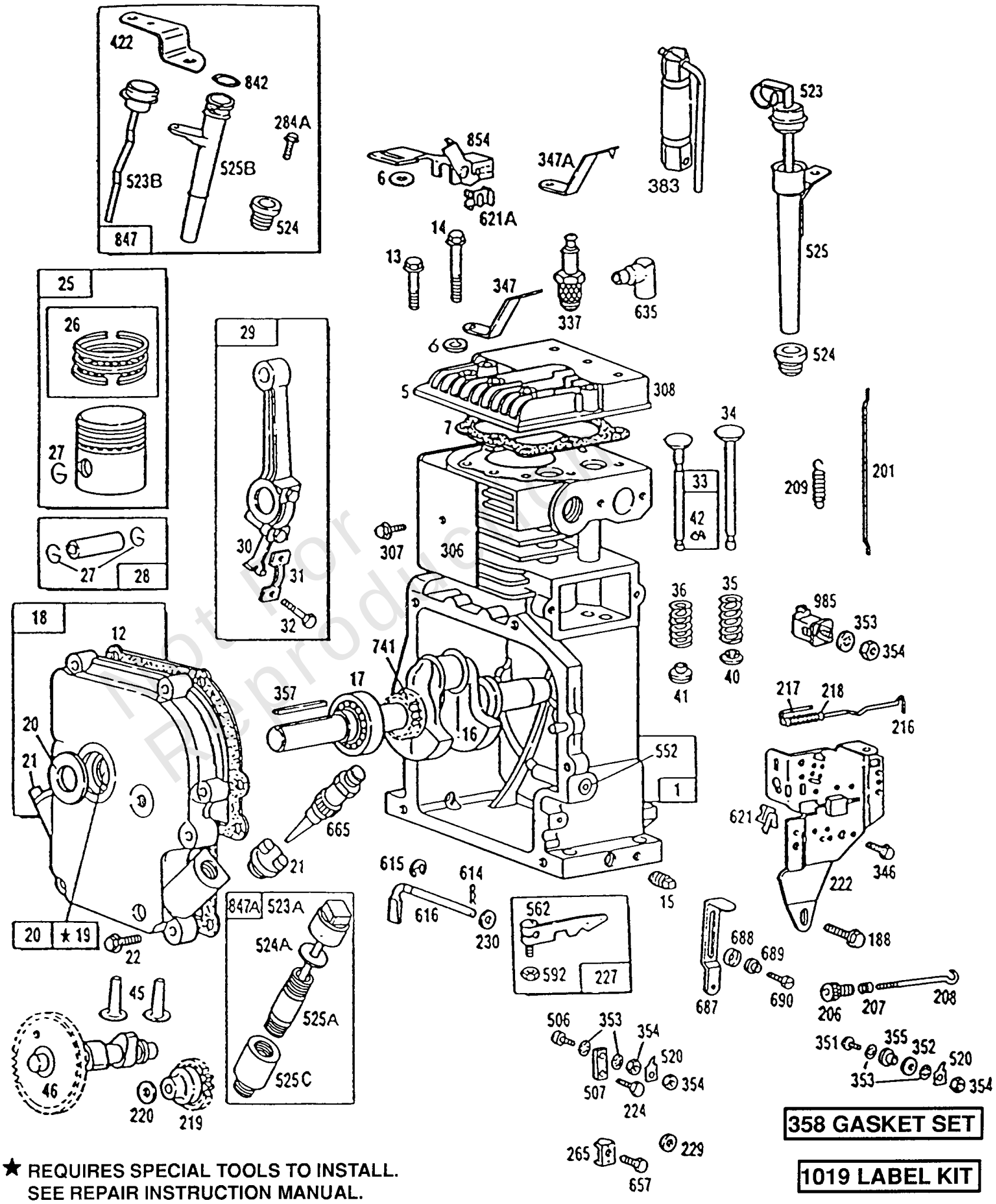

358 GASKET SET

1019 LABEL KIT

★ REQUIRES SPECIAL TOOLS TO INSTALL.
SEE REPAIR INSTRUCTION MANUAL.

Copyright © Briggs & Stratton. All Rights reserved

REF NO	PART NO	QTY	DESCRIPTION
26	391671		SET, Ring -(.020 Oversize)
26	391672		SET, Ring -(.030 Oversize)
27	68546		LOCK, Piston Pin
28	295840		PIN, Piston -(Standard)
28	295841		PIN, Piston -(.005 Oversize)
29	390401		ROD, Connecting -For Connecting Rod With .020 Undersize Crankpin Bore-Order Part No. 390773
30	222113		DIPPER, Connecting Rod
31	222114		LOCK, Rod Screw
32	92659		SCREW -(Connecting Rod)
33	390419		VALVE, Exhaust -(Includes Retainer(s))
34	261055		VALVE, Intake
35	65906		SPRING, Valve -(Intake)
36	26828		SPRING, Valve -(Exhaust)
40	221596		RETAINER, Valve -(Valves With Groove In Stem)
41	292260		RETAINER, Valve -(Exhaust Valve) (Exhaust)
42	93630		KEEPER, Valve -(2)
45	260933		TAPPET, Valve
46	211689		CAMSHAFT
188	93535		SCREW -(5/16-18 X 3/4)
201	260872		LINK, Throttle
206	230149		NUT, Governor Adjusting -(5-44) -Used Before Code Date 83121600
206	231266		NUT, Governor Adjusting -(6-32) -Used After Code Date 83121500
207	26855		SPRING, Governor Link
208	230841		ROD, Governor Control -Used Before Code Date 83121600
208	261959		ROD, Governor Control -Used After Code Date 83121500
209	260695		SPRING, Governor
216	261122		LINK, Choke -Used Before Code Date 83121600
216	262026		LINK, Choke -Used After Code Date 83121500
217	261119		SPRING, Choke Return
218	222352		WASHER
219	391737		GEAR, Governor -Used Before Code Date 91061000
219	494845		GEAR, Governor -Used After Code Date 91060900

Not For Reproduction

Footnotes:

The Following Studs are Used Above Type No. 2799

Copyright © Briggs & Stratton. All Rights reserved

Mfg. No: 190452-2632-01

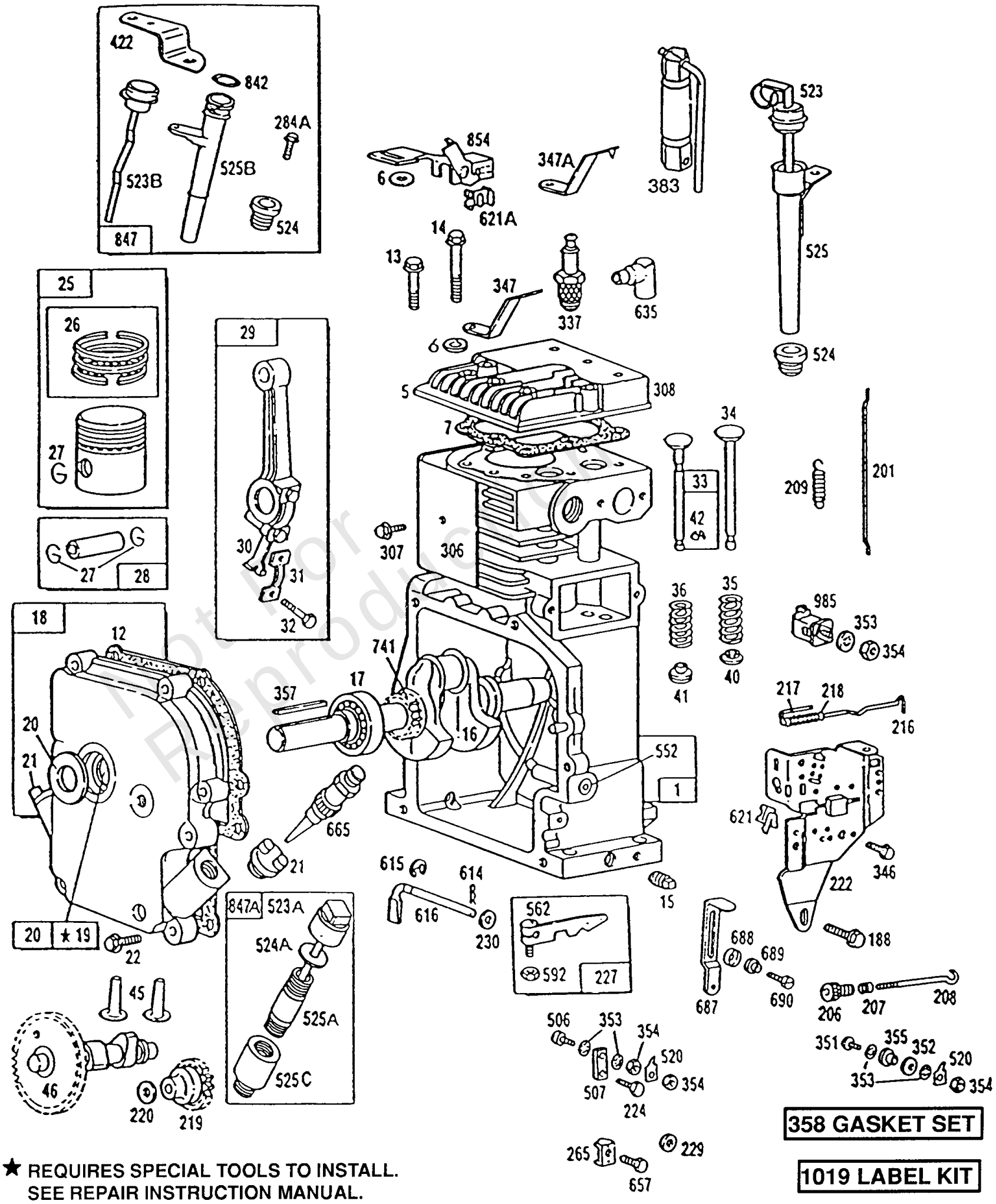

★ REQUIRES SPECIAL TOOLS TO INSTALL.
SEE REPAIR INSTRUCTION MANUAL.

358 GASKET SET

1019 LABEL KIT

Copyright © Briggs & Stratton. All Rights reserved

Cyl,Crankcase,Piston,Control

REF NO	PART NO	QTY	DESCRIPTION
220	221551		WASHER -(Governor Lever)
222	390670		BRACKET, Control -Used Before Code Date 83121600
222	399150		BRACKET, Control -(Choke-A-Matic) -Used After Code Date 83121500
222	399151		BRACKET, Control -(Manual Choke) -Used After Code Date 88070500
222	399156		BRACKET, Control -Used After Code Date 83121500
224	93067		SCREW -(3/8)
227	391965		LEVER, Governor Control -(1/4 Diameter)
229	220680		WASHER
230	222450		WASHER
265	221535		CLAMP, Casing -(Stamped Steel)
284A	93886		SCREW
306	223374		SHIELD, Cylinder
307	93949		SCREW
308	222636		COVER, Cylinder Head
337	293918		PLUG, Spark
337	29693		PLUG, Spark
337	298809		PLUG, Spark
337	392588		PLUG, Spark
337	394539		PLUG, Spark -(Resistor)
337	492167		PLUG, Spark
337	802592		PLUG, Spark -(Resistor)
346	93705		SCREW -(8-32 X 3/8)
347A	293739		SWITCH, Spark Plug Stop
347A	298926		SWITCH, Spark Plug Stop
347	220197		SWITCH, Stop -(1-1/2 High, 38 Mm. Spark Plugs)
351	91920		SCREW -(8-32 X 5/8)
351	93735		SCREW
352	66068		WASHER -(Fiber)
353	92791		WASHER
354	90576		NUT -(Ground Terminal)
355	66554		WASHER -(Insulating)
357	91540		KEY, Drive Pulley -(1/4)
358	299577		GASKET SET, Engine
383	89838		WRENCH, Spark Plug
422	223375		BRACKET, Oil Fill

Not For Reproduction

Footnotes:

The Following Studs are Used Above Type No. 2799

Copyright © Briggs & Stratton. All Rights reserved

Mfg. No: 190452-2632-01

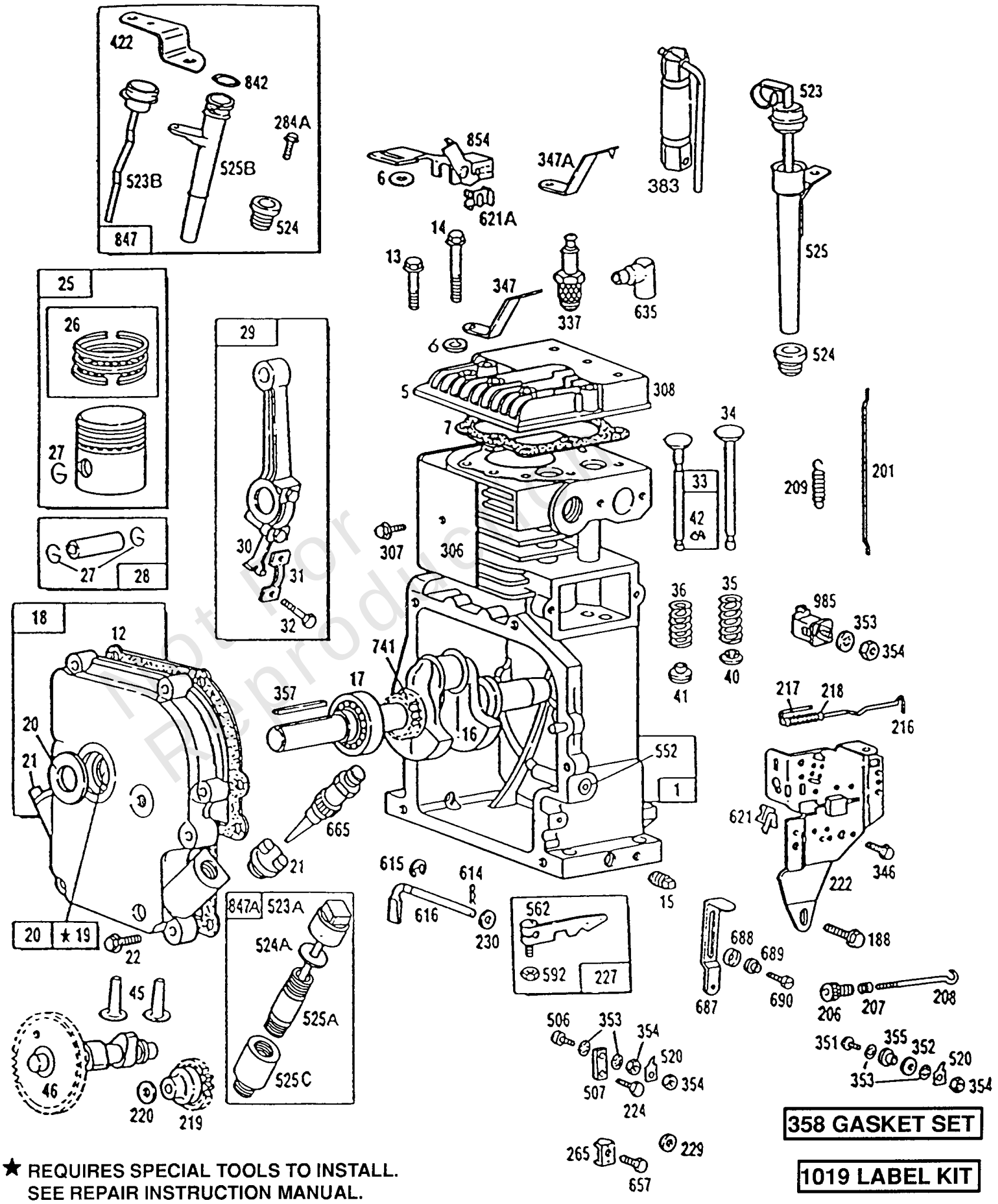

★ REQUIRES SPECIAL TOOLS TO INSTALL.
SEE REPAIR INSTRUCTION MANUAL.

358 GASKET SET

1019 LABEL KIT

Copyright © Briggs & Stratton. All Rights reserved

REF NO	PART NO	QTY	DESCRIPTION
506	90200		SCREW -(8-32 X 1/2)
507	66895		INSULATOR
520	93722		TERMINAL, Ground
523A	297357		DIPSTICK/CAP ASSEMBLY
523A	295923		CAP, Oil Fill -Uses: 65304 Gasket 230553 Nipple-Oil Fill (5-1/4 Lg.)
523B	396987		DIPSTICK
523	390969		DIPSTICK
524A	65304		SEAL, O-Ring -(Dipstick Cap)
524	68838		SEAL, O-Ring -(Dipstick Tube) Included in Gasket Set-Part No. 299577
525A	230553		PIPE, Oil -(5-1/4)
525A	91258		TUBE, Dipstick -(2 1/2)
525C	394884		TUBE, Dipstick
525B	280220		TUBE, Dipstick
525	390970		TUBE, Dipstick
552	491893		BUSHING, Governor Crank -(Includes Seal, Ref. 87)
562	92613		BOLT -(Governor Lever)
592	231082		NUT -(Governor Control)
614	93306		PIN, Cotter
615	93307		RETAINER, Governor Shaft
616	231057		CRANK, Governor -(1/4 Diameter)
621A	297472		SWITCH, Stop
621	297472		SWITCH, Stop -Used Before Code Date 85041500
621	396847		SWITCH, Stop -Used After Code Date 85041400
635	66538		BOOT, Spark Plug
657	93496		SCREW -(10-32 X 5/8)
665	298859		MINDER, Oil
687	390690		SLIDE, Control
688	221766		SPRING, Friction
689	260847		SPRING, Friction
690	90746		SCREW -(10-32 X 5/8)
741	261195		GEAR, Timing -(Pin)
741	262479		GEAR, Timing -(Key)
842	271170		SEAL, O-Ring -(Dipstick Tube)
847A	493955		DIPSTICK/TUBE ASSEMBLY
847	399901		DIPSTICK/TUBE ASSEMBLY
854	392884		BRACKET, Stopswitch

Footnotes:

The Following Studs are Used Above Type No. 2799

Not For Reproduction

Copyright © Briggs & Stratton. All Rights reserved

Mfg. No: 190452-2632-01

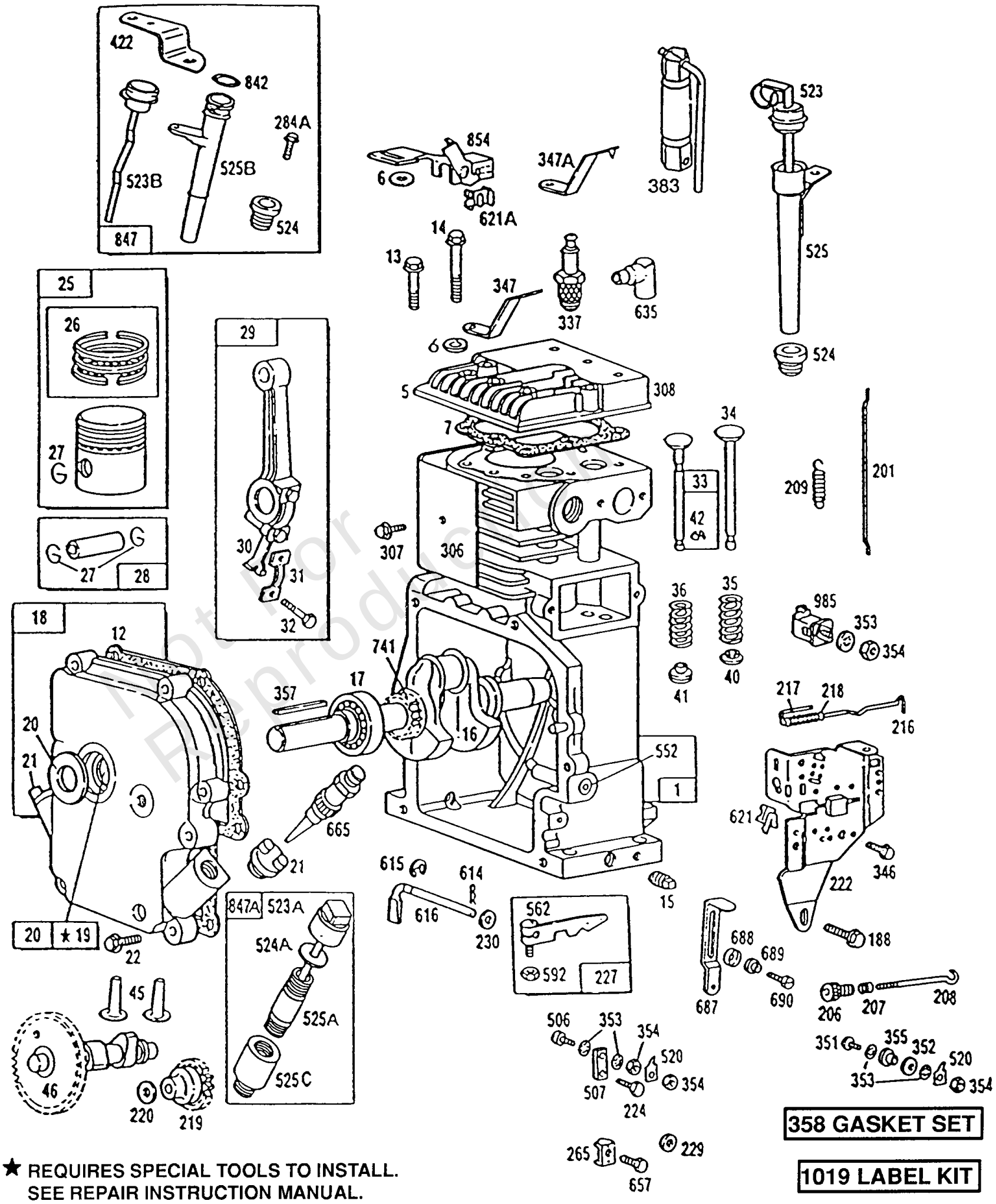

★ REQUIRES SPECIAL TOOLS TO INSTALL.
SEE REPAIR INSTRUCTION MANUAL.

358 GASKET SET

1019 LABEL KIT

Not for Reproduction

Cyl,Crankcase,Piston,Control

REF NO	PART NO	QTY	DESCRIPTION
985	398525		INSULATOR
1019	491181		KIT, Label

Not For Reproduction

Footnotes:

The Following Studs are Used Above Type No. 2799

Copyright © Briggs & Stratton. All Rights reserved

Electric Starter and Chart

Mfg. No: 190452-2632-01

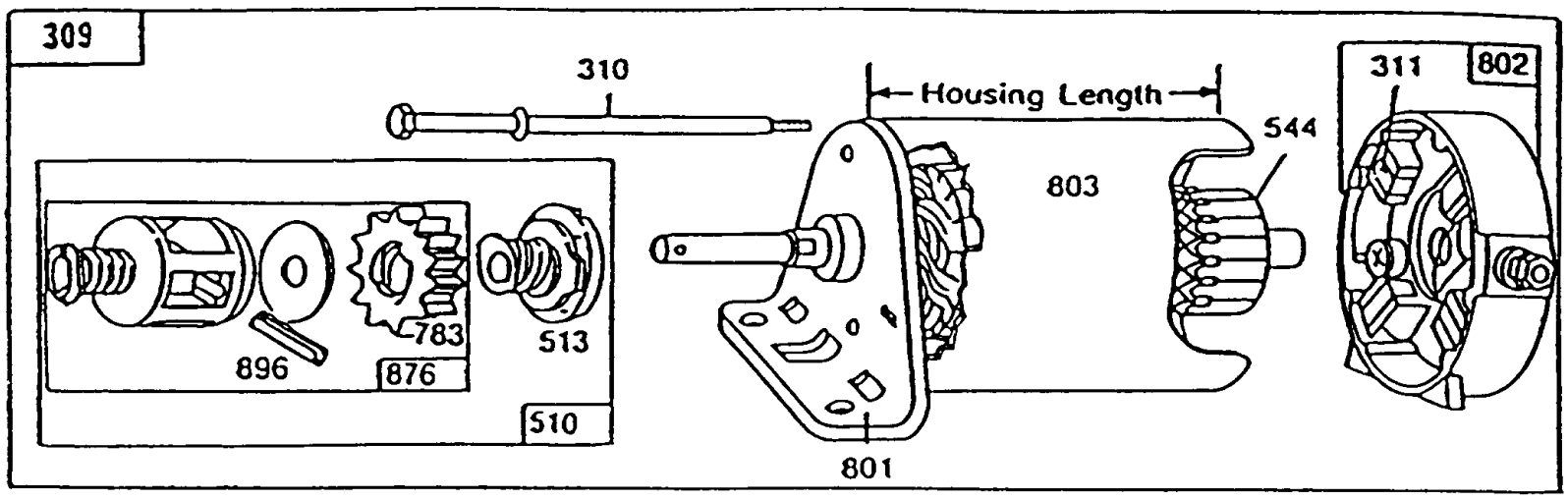

Reference No.		309	310	311	510	544	801	802	803
Starter Motor Mfr.		Motor & Drive Ass'y.	Thru Bolt	Brush Assembly	Drive Assembly	Armature Assembly	End Cap Assy.-Drive	End Cap Assy.-Commutator	Housing Assembly
Briggs & Stratton	Housing Length								
12V	3-21/32"	394805	94003	395538	490421**	390837	394856	395537*	398159
United Technologies	Housing Length								
12V	3-15/32"	394805	-	492020	490421**	-	394856	492021*	-

*Includes Brush Set

**Includes #398003 Clutch Assembly (Ref. No. 513)
#280104 Gear (Ref. No. 783)
#490467 Retainer Kit (Ref. No. 876)
94192(Black) or 94288(Yellow)Roll Pin (Ref. No. 896)

Not For Reproduction

Copyright © Briggs & Stratton. All Rights reserved

Electric Starter and Chart

REF NO	PART NO	QTY	DESCRIPTION
309	394805		MOTOR, Starter -(3 1/16 Housing)
310	93934		SCREW -(3 1/2 Housing)
310	94003		SCREW -(3 5/8 Housing)
311	393612		SET, Brush -(3 1/2 Housing) (110V)
311	395538		SET, Brush -(3-5/8 or 4 3/8 Housing)
311	492020		SET, Brush -(3 15/32 Housing)
510	490421		DRIVE, Starter -Includes #398003 Clutch Assembly (Ref. No. 513) #280104 Gear (Ref. No. 783) #490467 Retainer and Pin (Ref. No. 773) #94288 Roll Pin (Ref. No. 896) (3-21/32 or 4 9/16 Housing)
510	490421		DRIVE, Starter -Includes #398003 Clutch Assembly (Ref. No. 513) #280104 Gear (Ref. No. 783) #490467 Retainer Kit (Ref. No. 876) #94192 (Black) or 94288 (Yellow) Roll Pin (Ref. No. 896) (3-21/32 or 4 9/16 Housing)
544	390837		ARMATURE, Starter -(3 5/8 Housing)
544	396505		MOTOR, Starter -(3 1/2 Housing) (Briggs & Stratton 110V)
801	394398		CAP, Drive -(3 1/2 Housing)
801	394856		CAP, Drive
802	393833		CAP, End -(3 1/2 Housing) (Briggs & Stratton 110V) -Used Before Code Date 87040100
802	395537		CAP, End -(3 5/8 Housing) Includes Brush Set
802	491192		CAP, End -(3 1/2 Housing) (Briggs & Stratton 110V) -Used After Code Date 87033100
802	492021		CAP, End -(3 15/32 Housing) Includes Brush Set
803	394254		HOUSING, Starter -Used Before Code Date 87040100
803	398159		HOUSING, Starter -(3 5/8 Housing)
803	491008		HOUSING, Starter -(3 1/2 Housing) (Briggs & Stratton 110V) -Used After Code Date 87033100

Not For Reproduction

Copyright © Briggs & Stratton. All Rights reserved

Electric Starter and Starter

Mfg. No: 190452-2632-01

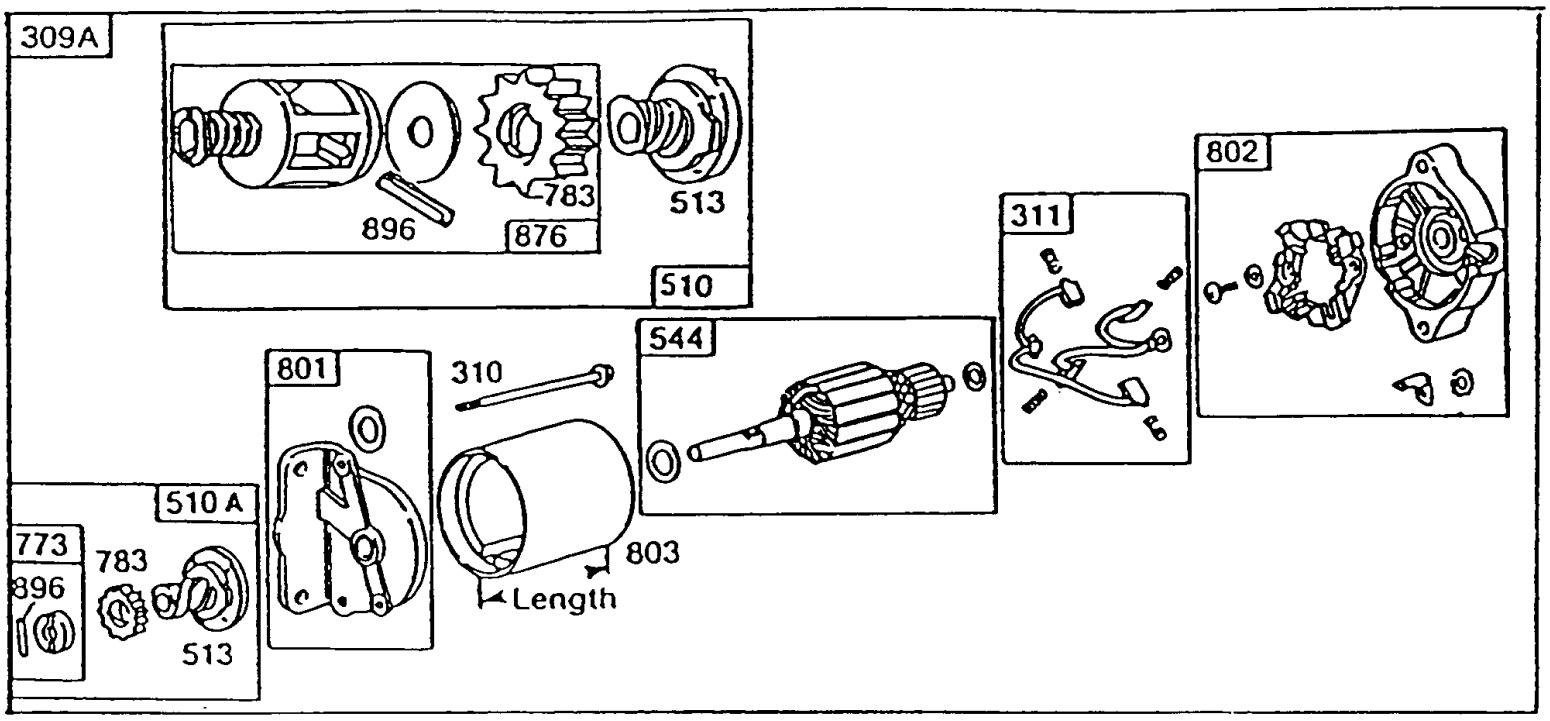

Reference Number		309 & 895	310	311	510	510A	544	801
Manufacturer		Motor and Control Ass'y.	Thru Bolt Assembly	Brush Assembly	Drive Assembly	Drive Assembly	Armature Assembly	Drive End Cap Assembly
Briggs & Stratton	Housing Length							
120V	3-1/2"	396505	93934	393612	490421*	391461**	396505	394398

*Includes #398003 Clutch Assembly (Ref. No. 513)
#280104 Gear (Ref. No. 783)
#490467 Retainer and Pin (Ref. No. 773)
94288 Roll Pin (Ref. No. 896)

**Includes #398003 Clutch Assembly (Ref. No. 513)
#280104 Gear (Ref. No. 783)
#391462 Retainer and Pin (Ref. No. 876)
94192 (Black) or 94288 (Yellow)Roll Pin (Ref. No. 896)

Reference Number	802	803
Code Date	Comm. End Cap Ass'y.	Housing Assembly
Before 87040100	393833	394254
After 87033100	491192	491008

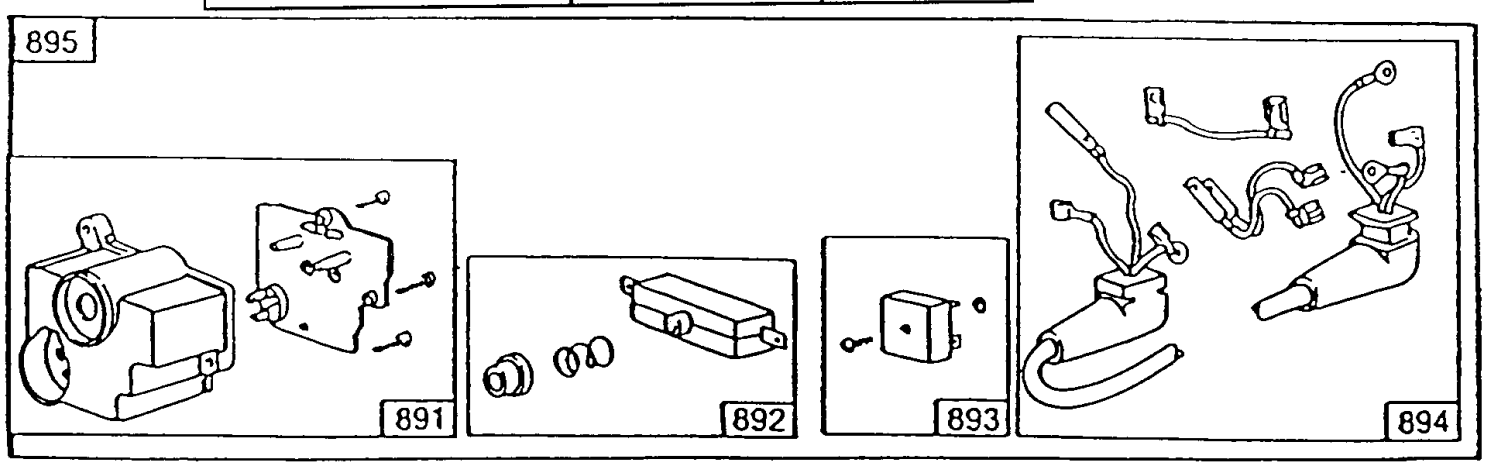

Reference Number	891	892	893	894	895
Manufacturer	Housing Group	Switch Group	Rectifier Group	Lead Group	Control Group
Briggs & Stratton					
120V	393705	393708	393707	393706	393486

Not For Reproduction

Electric Starter and Starter

REF NO	PART NO	QTY	DESCRIPTION
309A	396505		MOTOR, Starter -(3 1/2 Housing) (Briggs & Stratton 110V)
310	93934		SCREW -(3 1/2 Housing)
310	94003		SCREW -(3 5/8 Housing)
311	393612		SET, Brush -(3 1/2 Housing) (110V)
311	395538		SET, Brush -(3-5/8 or 4 3/8 Housing)
311	492020		SET, Brush -(3 15/32 Housing)
510A	391461		DRIVE, Starter -(3 1/2 Housing) Includes #398003 Clutch Assembly (Ref. No. 513) #280104 Gear (Ref. No. 783) #391462 Retainer and Pin (Ref. No. 876) #94192 (Black) or 94288 (Yellow) Roll Pin (Ref. No. 896)
510	490421		DRIVE, Starter -Includes #398003 Clutch Assembly (Ref. No. 513) #280104 Gear (Ref. No. 783) #490467 Retainer Kit (Ref. No. 876) #94192 (Black) or 94288 (Yellow) Roll Pin (Ref. No. 896) (3-21/32 or 4 9/16 Housing)
510	490421		DRIVE, Starter -Includes #398003 Clutch Assembly (Ref. No. 513) #280104 Gear (Ref. No. 783) #490467 Retainer and Pin (Ref. No. 773) #94288 Roll Pin (Ref. No. 896) (3-21/32 or 4 9/16 Housing)
544	390837		ARMATURE, Starter -(3 5/8 Housing)
544	396505		MOTOR, Starter -(3 1/2 Housing) (Briggs & Stratton 110V)
801	394398		CAP, Drive -(3 1/2 Housing)
801	394856		CAP, Drive
802	393833		CAP, End -(3 1/2 Housing) (Briggs & Stratton 110V) -Used Before Code Date 87040100
802	395537		CAP, End -(3 5/8 Housing) Includes Brush Set
802	491192		CAP, End -(3 1/2 Housing) (Briggs & Stratton 110V) -Used After Code Date 87033100
802	492021		CAP, End -(3 15/32 Housing) Includes Brush Set
803	394254		HOUSING, Starter -Used Before Code Date 87040100
803	398159		HOUSING, Starter -(3 5/8 Housing)
803	491008		HOUSING, Starter -(3 1/2 Housing) (Briggs & Stratton 110V) -Used After Code Date 87033100
891	393705		HOUSING, Switch
892	393708		SWITCH, Starting -(Briggs & Stratton 110V)
893	393707		RECTIFIER -(Briggs & Stratton 110V)
894	393706		HARNESS, Wiring -(Briggs & Stratton 110V)
895	393486		SWITCH, Starting -(Briggs & Stratton 120V)
895	396505		MOTOR, Starter -(3 1/2 Housing) (Briggs & Stratton 110V)

Not For Reproduction

Copyright © Briggs & Stratton. All Rights reserved

Mfg. No: 190452-2632-01

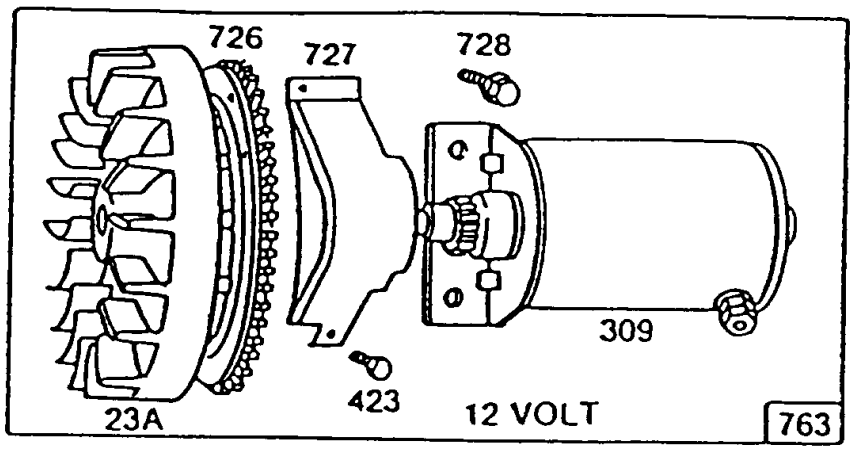

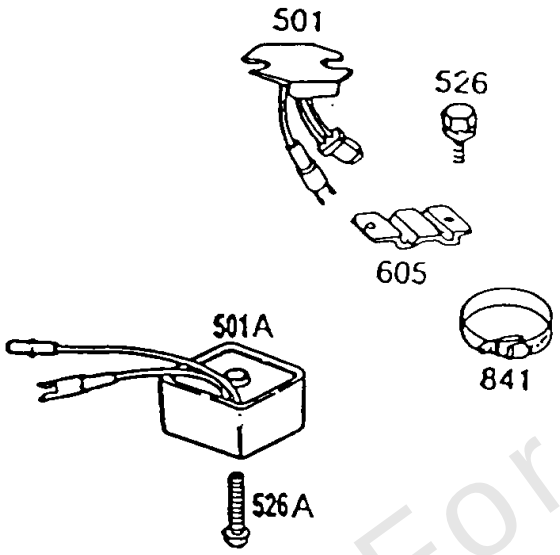

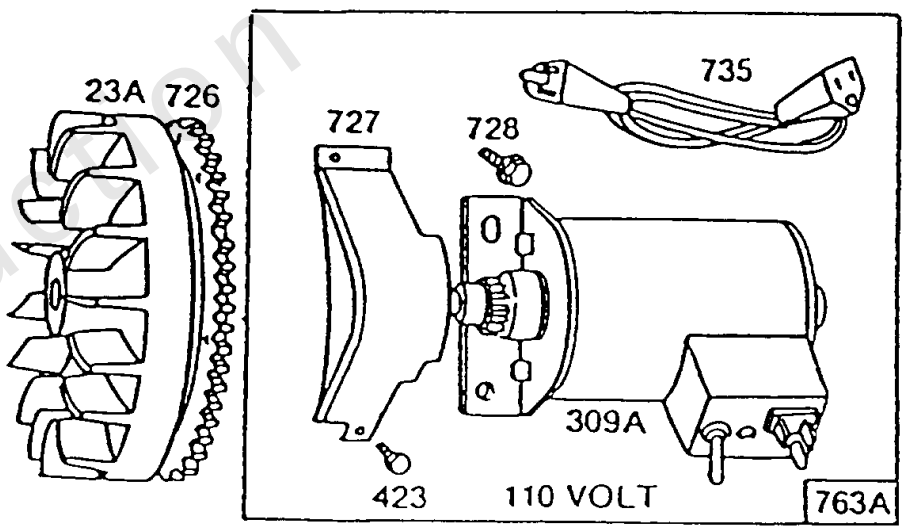

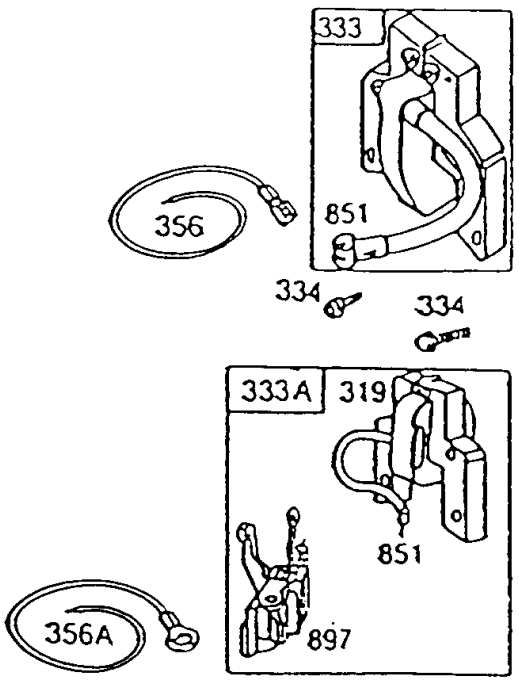

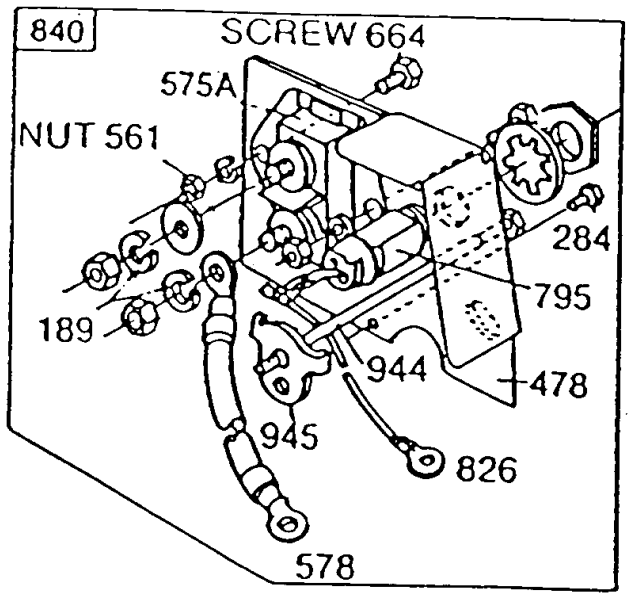

Not For Reproduction

Copyright © Briggs & Stratton. All Rights reserved

Electric Starters & KeyPanel

REF NO	PART NO	QTY	DESCRIPTION
23A	391983		FLYWHEEL -(Engines With Alternator) For Use on Engines WITH ALTERNATOR. (Includes Aluminum Ring Gear.)
23A	392034		FLYWHEEL -(Aluminum Ring Gear) For Use Only on Electric Starter Engines WITHOUT ALTERNATOR (Includes Aluminum Ring Gear.)
189	90366		WASHER
284	93572		SCREW -(10-32 X 3/8)
309A	396505		MOTOR, Starter -(3 1/2 Housing) (Briggs & Stratton 110V)
309	394805		MOTOR, Starter -(3 1/16 Housing)
319	395326		ARMATURE, Magneto -(Electronic Ignition-Without Module)
333A	398811		ARMATURE, Magneto -(Magnetron Ignition)
333	398811		ARMATURE, Magneto -(Magnetron Ignition)
334	93381		SCREW
356A	398808		WIRE, Stop -(Cut To Required Length) All Wires Listed Are Used With Armature-Ref. 333A Only
356	398838		WIRE, Stop
423	94625		SCREW
478	395410		KIT, Panel
501A	491546		REGULATOR -(9 Amp)
501	394890		REGULATOR -(10, 13, or 16 Amp, Depending on Size of Flywheel Magnets)
526A	94137		SCREW -(Regulator)
526	93343		SCREW -(Control Panel)
561	92278		NUT -(Starting Switch)
575A	299139		SWITCH, Starting
578	392683		CABLE, Starter
605	222934		BRACKET, Mounting
664	93415		SCREW -(1/4-20 X 3/4)
726	392134		GEAR, Ring
727	221940		GUARD, Flywheel -Used Before Code Date 86082600
727	221940		GUARD, Flywheel -Used Before Code Date 86082600
727	223597		GUARD, Flywheel -Used After Code Date 86082500
727	395405		COVER, Starter Drive
728	93535		SCREW -(5/16-18 X 3/4)
735	390966		CORD, Starter -(Includes Adaptor Plug)

Not For Reproduction

Footnotes:

Both Guards Use: 221968 Guard-Upper Ring Gear 93712 Screw (2)
Both Guards Use: 93712 Screw (2)
The Following Studs are Used Above Type No. 2799

Copyright © Briggs & Stratton. All Rights reserved

Mfg. No: 190452-2632-01

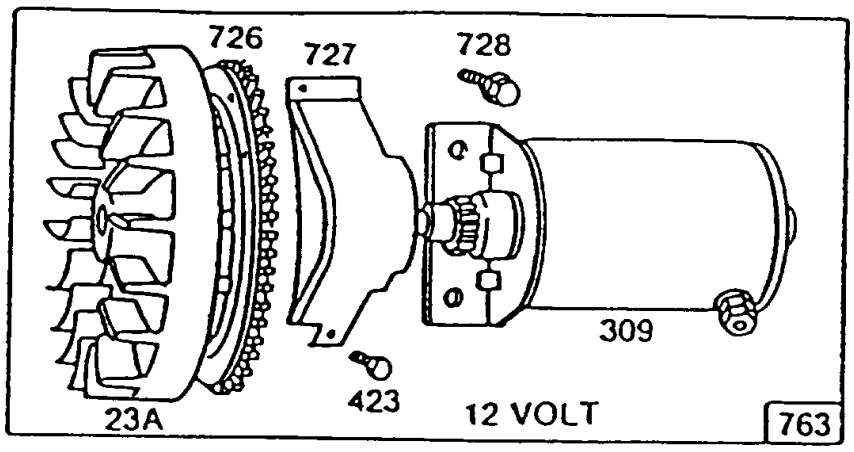

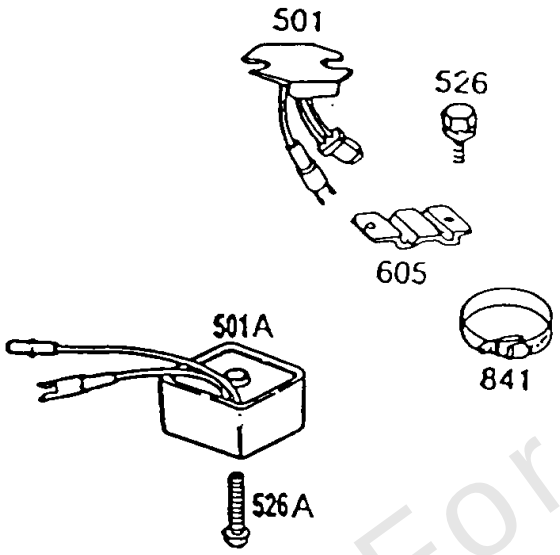

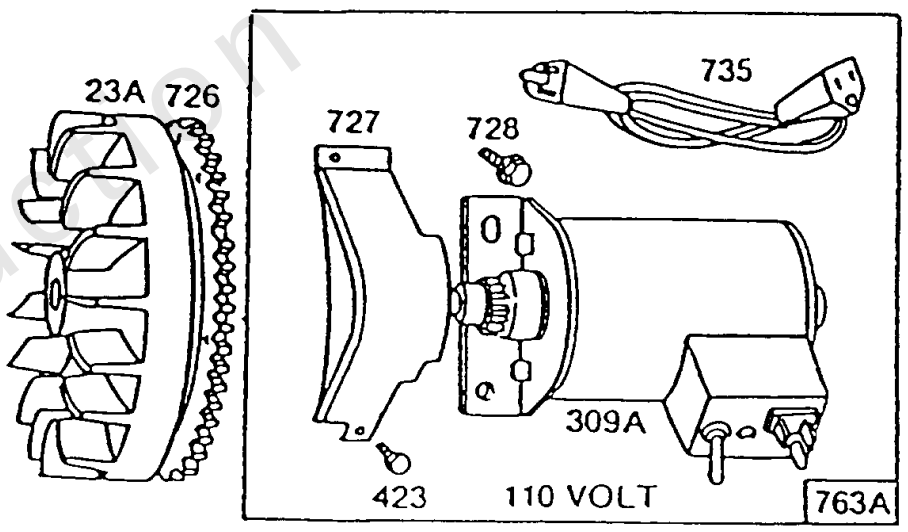

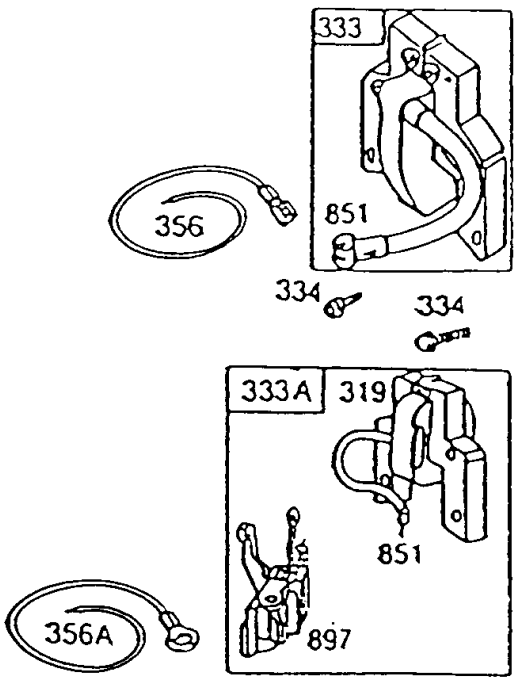

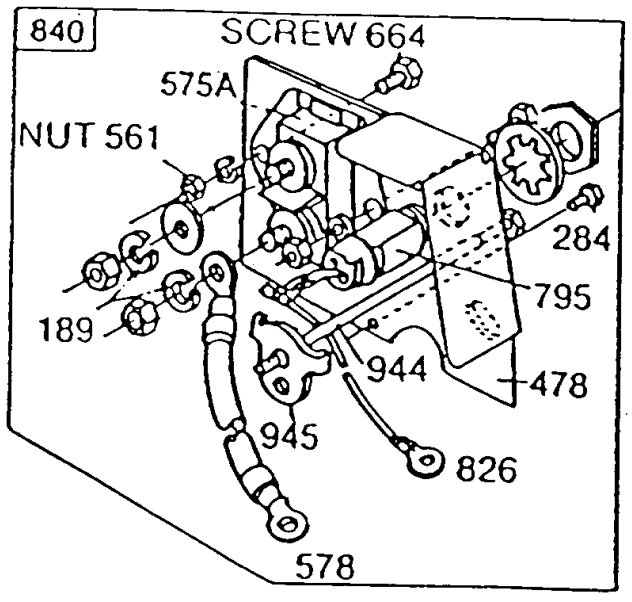

Not For Reproduction

Copyright © Briggs & Stratton. All Rights reserved

Electric Starters & KeyPanel

REF NO	PART NO	QTY	DESCRIPTION
763A	396507		KIT, Electric Starter -(110 Volt Gear Drive) (Cannot Be Used With Alternator)
763	394952		KIT, Electric Starter -(12 Volt Gear Drive)
795	392697		SWITCH, Toggle -(Toggle Switch) Uses: 93888 Nut-Hex.
795	392833		SWITCH, Key -Uses: 392832 Key Set
826	397674		WIRE, Stop -(Starter Switch to Ground Wire Terminal)
840	395408		KIT, Panel -(Toggle Switch)
840	395409		KIT, Panel -(Key Switch)
841	393514		CLAMP
851	221798		TERMINAL, Spark Plug
897	394970		KIT, Magnetron Ignition
944	94003		SCREW -(3 5/8 Housing)
945	223159		BRACKET, Starter Motor

Not For Reproduction

Footnotes:

Both Guards Use: 221968 Guard-Upper Ring Gear 93712 Screw (2)
Both Guards Use: 93712 Screw (2)
The Following Studs are Used Above Type No. 2799

Copyright © Briggs & Stratton. All Rights reserved

Mfg. No: 190452-2632-01

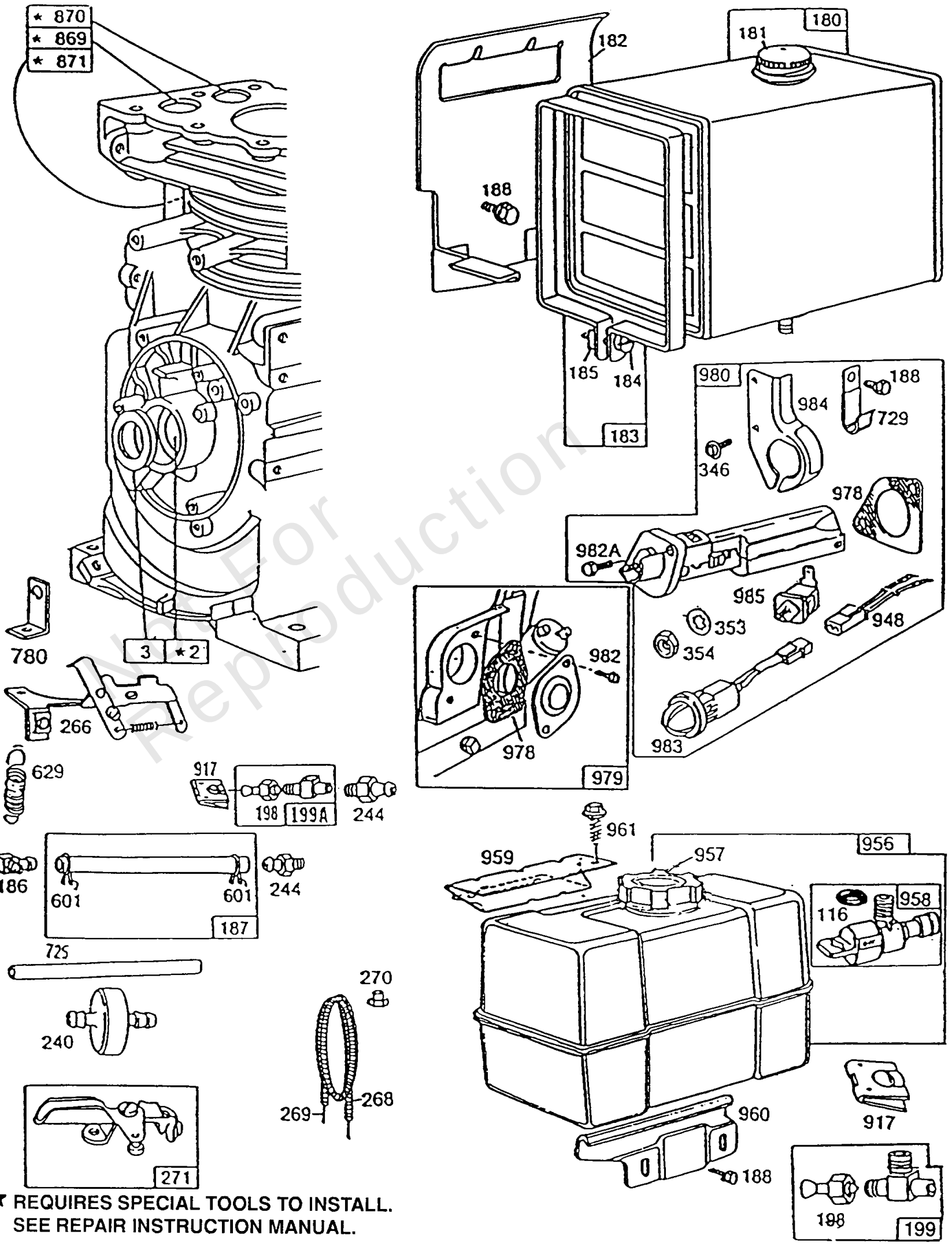

★ REQUIRES SPECIAL TOOLS TO INSTALL.
SEE REPAIR INSTRUCTION MANUAL.

Not For Reproduction

Fuel Tank Groups, Primer

REF NO	PART NO	QTY	DESCRIPTION
2	295962		KIT, Bushing/Seal
3	294606		SEAL, Oil -Included in Gasket Set-Part No. 299577
116	280203		SEAL, O-Ring -(Fuel Shut Off)
180	290816		TANK, Fuel -(4 Quart)
180	292945		TANK, Fuel -(3 Quart Tank)
180	69221		CAP, Fuel Tank -(1 3/4 O.D. Top)
181	392305		CAP, Fuel Tank -(Metal)
182	222758		BRACKET, Fuel Tank
183	291367		STRAP, Fuel Tank -(4 Quart)
184	91257		SCREW -(1/4-20 X 1-1/2)
185	90970		NUT -(1/4-20)
186	67218		CONNECTOR, Hose
187	296004		LINE, Fuel -(Cut To Required Length)
187	393815		HOSE, Vacuum -(Cylinder To Impulse Pump)(Cut To Required Length)
188	93535		SCREW -(5/16-18 X 3/4)
198	293934		VALVE, Fuel Shut Off
199A	297563		OUTLET, Tank
199	399949		OUTLET, Tank
240	298090		FILTER, Fuel
244	230318		CONNECTOR, Hose
266	291460		CONTROL, Throttle -(Disc Type)
266	390802		CONTROL, Throttle -Uses: 261137 Spring-Throttle Return
268	65616		CASING, Control Wire -(Cut To Required Length)
269	26633		WIRE, Control -(Cut To Required Length) If Longer Wire is Required, Specify Length in Inches; if Shorter Wire is Needed, Order No. 26633 and Cut to Required Length.
270	63426		NUT -(Control Wire Casing)
271	290568		LEVER, Control
346	93705		SCREW -(8-32 X 3/8)
353	92791		WASHER
354	90576		NUT -(Ground Terminal)
601	93053		CLAMP, Hose -(Green)
601	93807		CLAMP, Hose -(Black)
629	261137		SPRING, Throttle Return -(Throttle Return)

Footnotes:

The Following Studs are Used Above Type No. 2799
Included in Carburetor Overhaul Kit-See Ref 121

Copyright © Briggs & Stratton. All Rights reserved

Mfg. No: 190452-2632-01

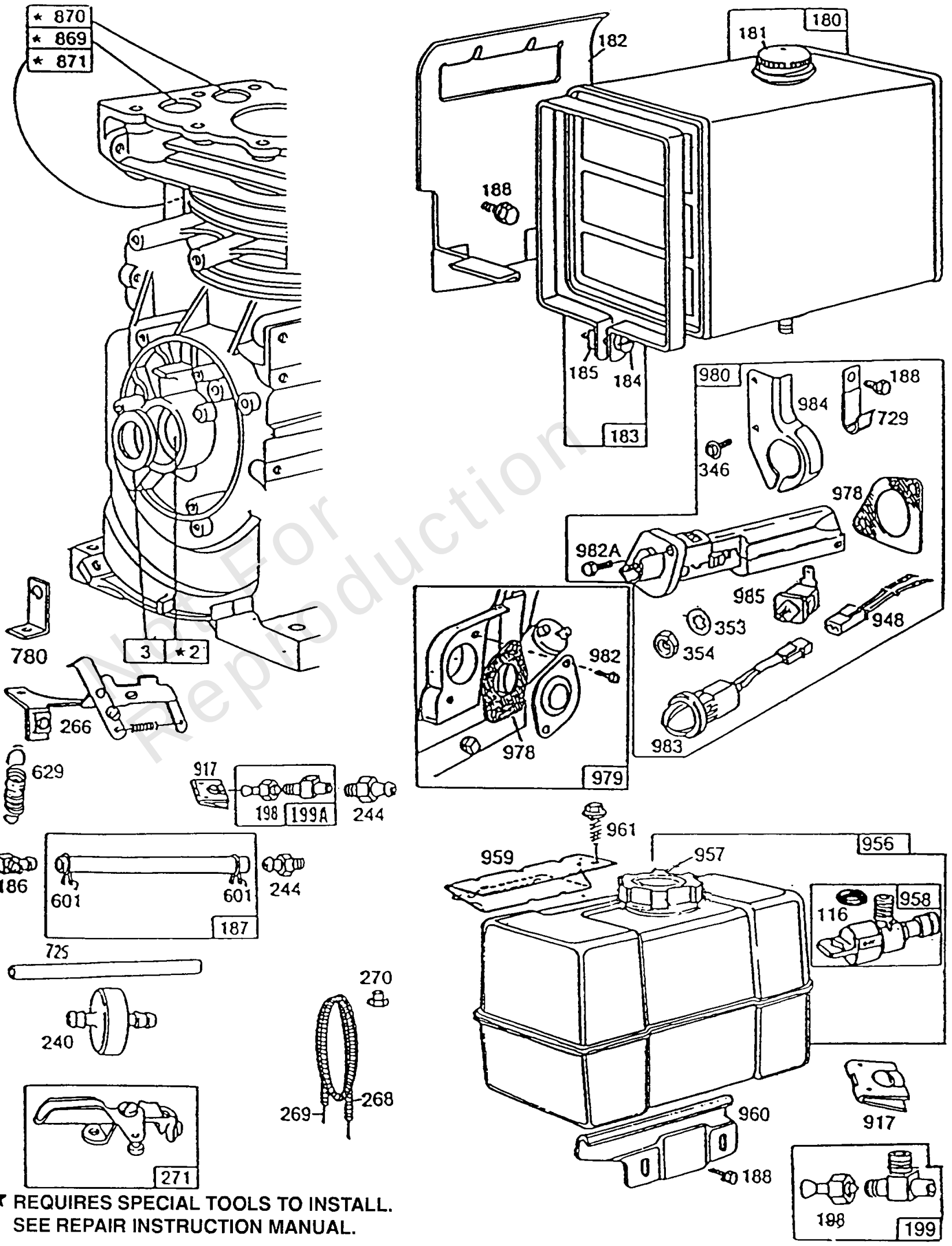

★ REQUIRES SPECIAL TOOLS TO INSTALL.
SEE REPAIR INSTRUCTION MANUAL.

Not For Reproduction

Fuel Tank Groups, Primer

REF NO	PART NO	QTY	DESCRIPTION
725	280692		LINE, Fuel
729	223528		CLIP -(Retainer)
869	211661		SEAT, Valve -(Exhaust)
870	211661		SEAT, Valve -(Exhaust)
871	231218		BUSHING, Valve Guide -(Intake)
917	223271		VALVE, Handle Shutoff
948	398661		HARNESS, Wiring
956	493337		TANK, Fuel -(4 Quart) (Plastic)
957	493988		CAP, Fuel Tank -(Plastic)
958	399517		VALVE, Fuel Shut Off -(Plastic)
959	223462		BRACKET, Fuel Tank -(Upper)
960	223463		BRACKET, Fuel Tank -(Lower) -Used Before Code Date 89040300
960	492990		BRACKET, Fuel Tank -(Lower)
961	94095		SCREW -(Tapping)
978	271736		GASKET, Oil Guard -Included in Gasket Set-Part No. 299577
979	398194		COVER, Oil Guard
980	398182		KIT, Oil Gard
982A	94146		SCREW -(Oil Guard)
982	94139		SCREW -(Oil Guard)
983	398660		LIGHT, Indicator -(Mounting With Light Bracket)
984	223773		BRACKET, Oil Guard Light
985	398525		INSULATOR

Not For Reproduction

Footnotes:

The Following Studs are Used Above Type No. 2799
Included in Carburetor Overhaul Kit-See Ref 121

Copyright © Briggs & Stratton. All Rights reserved

Mfg. No: 190452-2632-01

SNO-GARD PARTS

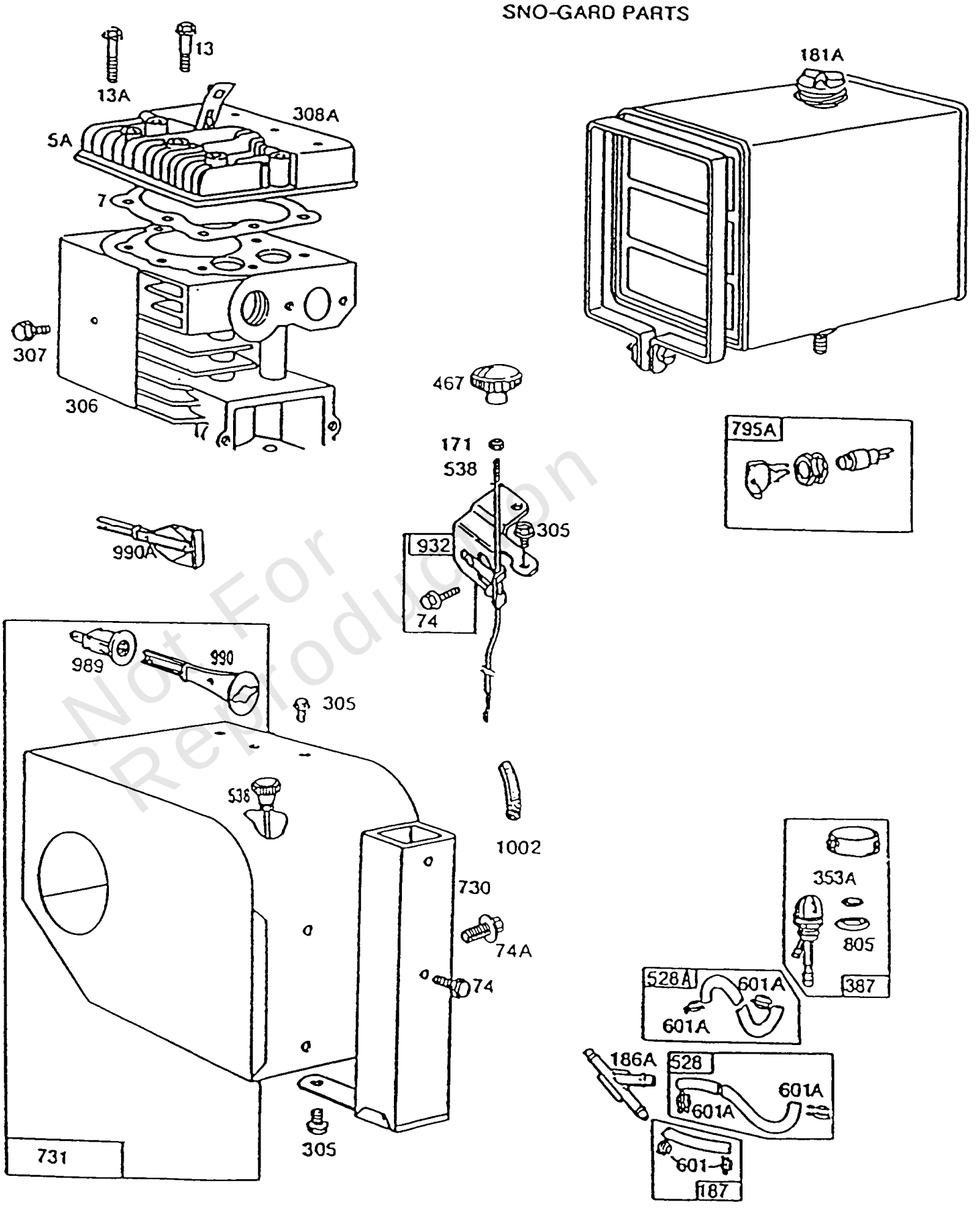

Not For Reproduction

Fuel Tank,Sno-Gard,Primer

REF NO	PART NO	QTY	DESCRIPTION
5A	211778		HEAD, Cylinder -(Sno gard)
7	270430		GASKET, Cylinder Head -Included in Gasket Set-Part No. 299577
13A	93583		STUD -(Cylinder Head)
13A	91397		NUT -(5/16-18)
13A	93113		SCREW -(2 5/16) (2-5/16)
13A	22963		WASHER
13A	93776		STUD -(Cylinder Head)
13	93776		STUD -(Cylinder Head)
13	94565		SCREW -(Cylinder Head) (3 9/16)
74A	93490		SCREW -(Rotating Screen)
74	93758		SCREW -(Rotating Screen)
171	90356		NUT -(10-24)
181A	297866		CAP, Fuel Tank -(Metal)
186A	280727		CONNECTOR, Hose
187	296004		LINE, Fuel -(Cut To Required Length)
187	393815		HOSE, Vacuum -(Cylinder To Impulse Pump)(Cut To Required Length)
305	93158		SCREW -(1/4-20 X 5/8)
306	223374		SHIELD, Cylinder
307	93949		SCREW
308A	221901		COVER, Cylinder Head -(Sno gard)
353A	94281		WASHER
387	399255		PRIMER, Carburetor
467	493903		KNOB, Air Cleaner Cover
528A	399256		LINE, Fuel -(1/4 O.D.)
528	399254		LINE, Fuel -(1/4 O.D.)
538	390167		ROD, Governor Control
601A	94171		CLAMP, Hose
601	93053		CLAMP, Hose -(Green)
601	93807		CLAMP, Hose -(Black)
730	299384		MANIFOLD, Intake
731	399159		HOOD, Snow -Uses: 222322 Strap-Support 93730 Stud-Strap to Crankcase Cover 93490 Screw-Strap to Hood 93203 Nut-Hex. (1)

Not For Reproduction

Footnotes:

The Following Studs are Used Above Type No. 2799

Copyright © Briggs & Stratton. All Rights reserved

Mfg. No: 190452-2632-01

SNO-GARD PARTS

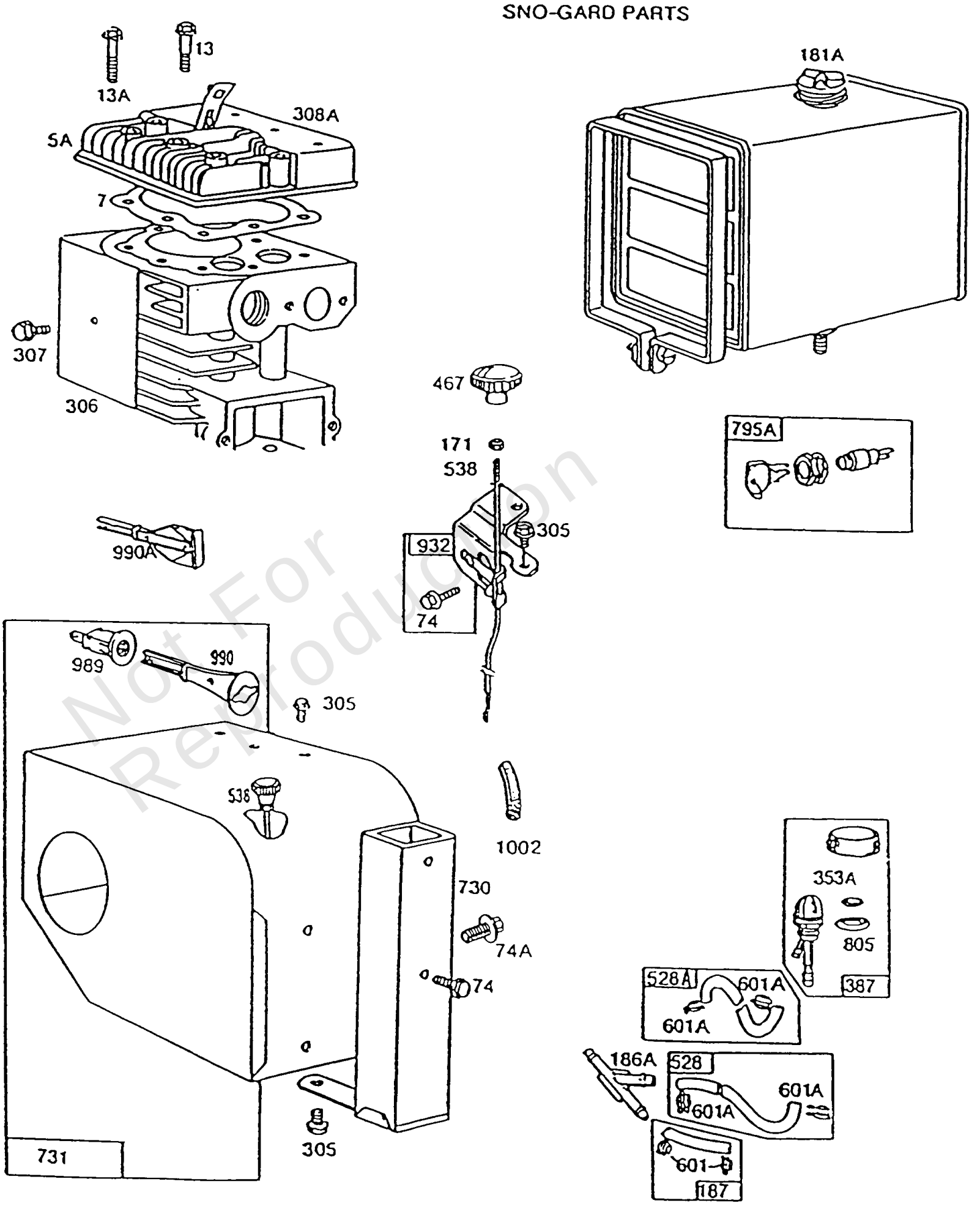

Not For Reproduction

Fuel Tank,Sno-Gard,Primer

REF NO	PART NO	QTY	DESCRIPTION
731	491981		HOOD, Snow -Uses: 222322 Strap-Support 93730 Stud-Strap to Crankcase Cover 93203 Nut-Hex. (1)
731	492291		HOOD, Snow
795A	392833		SWITCH, Key
805	94189		NUT -(Primer)
932	396084		GUIDE, Rod
989	399668		SWITCH, Stop -Used Before Code Date 87010100
989	491060		SWITCH, Stop -Used After Code Date 86123100
990A	280596		SET, Key
990	490023		SET, Key
1002	280738		SHIELD, Blower Housing

Not For Reproduction

Footnotes:

The Following Studs are Used Above Type No. 2799

Copyright © Briggs & Stratton. All Rights reserved

Replacement Engine - US & Canada

REF NO	PART NO	QTY	DESCRIPTION
	20S2520049	1	Replacement Engine
	-----		Top No-Load Speed: 3200 -Trim: ALL
	-----		Service Note: Gear Red. @ 3 o'clock.
	-----		Service Note: Cut off PTO shaft so it is 1-3/4" long from shoulder to outer end.
	-----		Service Note: If the replacement engine supersedes to or is a Model 200000 series engine, refer to the illustrations located after the conversion data for this model series.
	-----		Service Note: To make the crankshaft center line the same add 695154 spacer kit, other overall dimensions which differ, are shown in the illustrations.
	-----		Service Note: If after making a visual inspection and it is determined the Model 200000 series engine cannot be used because of equipment interference, the original engine should be repaired with a short block and/or individual parts.
	-----		Service Note: If necessary, to make the original engine crankshaft center line the same add 695154 spacer kit.
	-----		Service Note: For all Go-Karts use only a Model 136200 series engine as a replacement, regardless of the original Model.

Not For Reproduction

Copyright © Briggs & Stratton. All Rights reserved

Copyright © Briggs & Stratton. All Rights reserved